REQ. PER UNIT	USED ON MODEL	ASS'Y. NO.	DATE	TF-261	X1
2	LSP-11	A-3115	2-7-64		

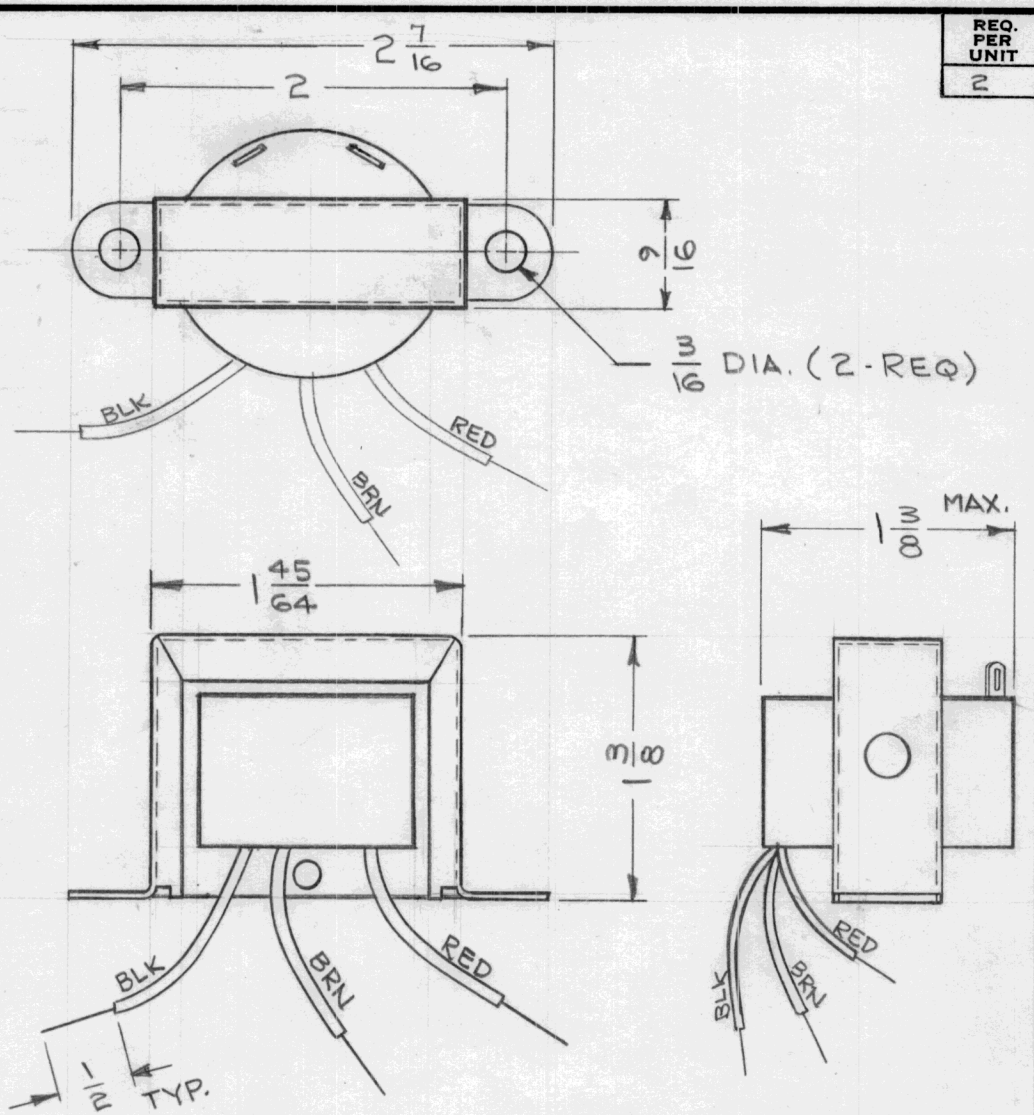

TYPE: LINE TO SPEAKER
IMPEDANCE: PRIMARY - 500 OHMS
SECONDARY - 6 to 8 OHMS/3.2OHMS
DIRECT CURRENT RATING: NOT RATED
AUDIO OPERATING LEVEL: 5.0 WATTS
FREQUENCY RANGE: 100 to 20,000CPS ±2.0 db
TURNS RATIO: 8.8: 1 OVERALL
CASE DATA: TYPE - CHANNEL FRAME
MATERIAL - STEEL
FINISH - CADMIUM PLATE
TERMINAL DATA: QUANTITY-3 WIRE LEADS, 6-1/2"
2 TERMINALS
WEIGHT: 1/4 POUND

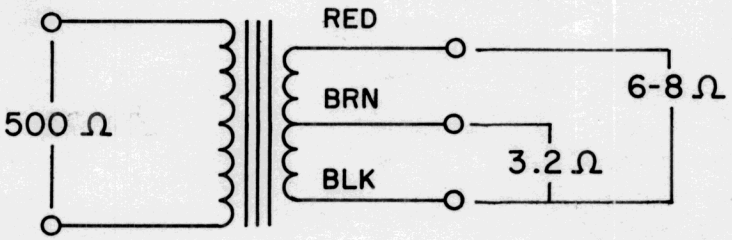

—SCHEMATIC DIAGRAM—

SYM	DESCRIPTION	DATE	CH. NO.	DRAFTS	CHECKER	ENG. APP.
X1	COMPLETELY REDRAWN	2-7-64				

UNLESS OTHERWISE SPECIFIED
DIMENSIONS ARE IN INCHES AND INCLUDE
CHEMICALLY APPLIED OR PLATED FINISHES

SCALE —

TOLERANCES
DECIMALS .X ±.05 .XX ± .01 .XXX ±.005
FRACTIONS ± 1/64
ANGLES ± 0° 30′

CODE C

S401-157 (A8101)

REQ.	ITEM	PART NO.	DESCRIPTION	SYMBOL

STOCK SIZE —

MATERIAL —

TYPE & TEMPER — HEAT TREAT. SPEC. —

FINISH & SPEC. NO. —

JOHNSON

THE TECHNICAL MATERIEL CORP.
MAMARONECK. NEW YORK

TRANSFORMER, AUDIO FREQUENCY

DRAWN	CHECKED	FINAL APPROVAL
	2/10/64	
JC 2/10/64		TF-261
ELEC. DES. APP.	MECH. DES. APP.	

TMC FORM 108-A

STOCK NO. 440H