REQ. PER UNIT	USED ON MODEL	ASS'Y. NO.	DATE
2	GPT10K-RFB	A-1625	4/6/59
4	GPT-10K	A-1625	4/6/59
2	GPT-750(RTF)	A-1625	4/6/59

PX-470 C

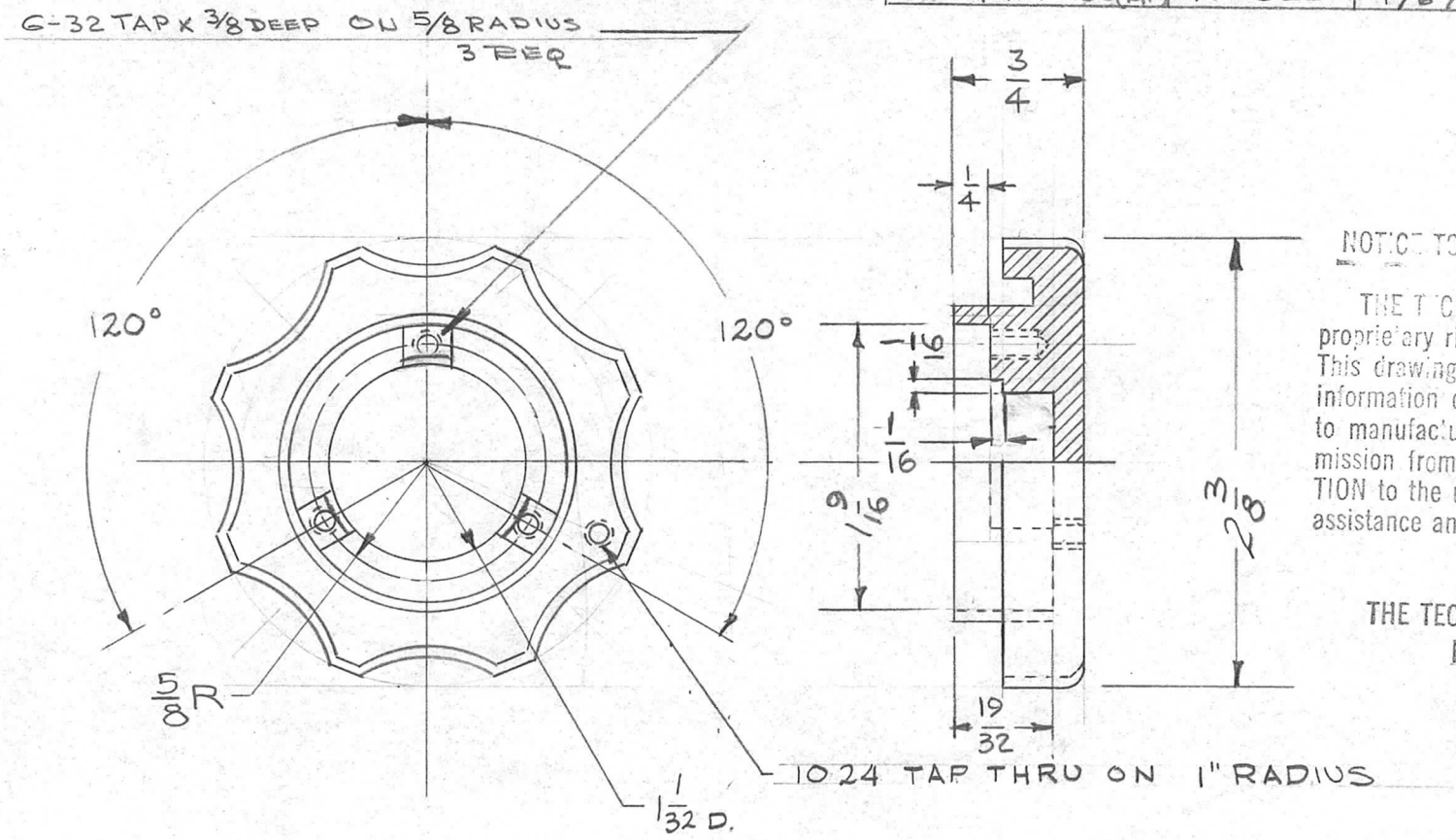

NOTICE TO PERSONS RECEIVING THIS DRAWING

THE TECHNICAL MATERIEL CORPORATION claims proprietary right in the material disclosed hereon. This drawing is issued in confidence for engineering information only and may not be reproduced or used to manufacture anything shown hereon without permission from THE TECHNICAL MATERIEL CORPORATION to the user. This drawing is loaned for mutual assistance and is subject to recall at any time.

Property of:

THE TECHNICAL MATERIEL CORPORATION
MAMARONECK, NEW YORK

REF: MP-110 (MODIFIED AS SHOWN)

ISSUE	ITEM	CHANGED FROM	DATE	CH. NO.	DRAFTS	CHECKER	ENG. APP.
C	1	1/16 x 1/16 STEP FOR MTG. SHOULDERS ADDED	3-3-66	15848	G.D.L		
B	2 1	3/4 DIM WAS 11/16 19/32 DIM WAS 17/32	4.15.64	11236	JB		
A	1	PX-470 WAS MP-113	4/20/59	1	J.C.B.		

REQ.	ITEM	PART NO.	DESCRIPTION	SYMBOL

STOCK SIZE

MATERIAL

TYPE & TEMPER | HEAT TREAT. SPEC.

FINISH & SPEC. NO.

THE TECHNICAL MATERIEL CORP.
MAMARONECK, NEW YORK

KNOB, MODIFICATION

DRAWN	CHECKED	FINAL APPROVAL
DRILLED		

ELEC. DES. APP | MECH. DES. APP

PX-470 C

TOLERANCES

DEC. DIM. ±
FRAC. DIM. ±
ANGULAR DIM. ±

SCALE:

MAXIMUM ALLOWABLE TOLERANCES HAVE BEEN DETERMINED AND ANY DEVIATIONS WILL BE CAUSE FOR REJECTION. REMOVE ALL BURRS AND SHARP EDGES

FORM 108-A