REQ. PER UNIT	USED ON MODEL	ASS'Y. NO.	DATE	PO 278	A
1	GPT-200K	A 3198	11-13-63		

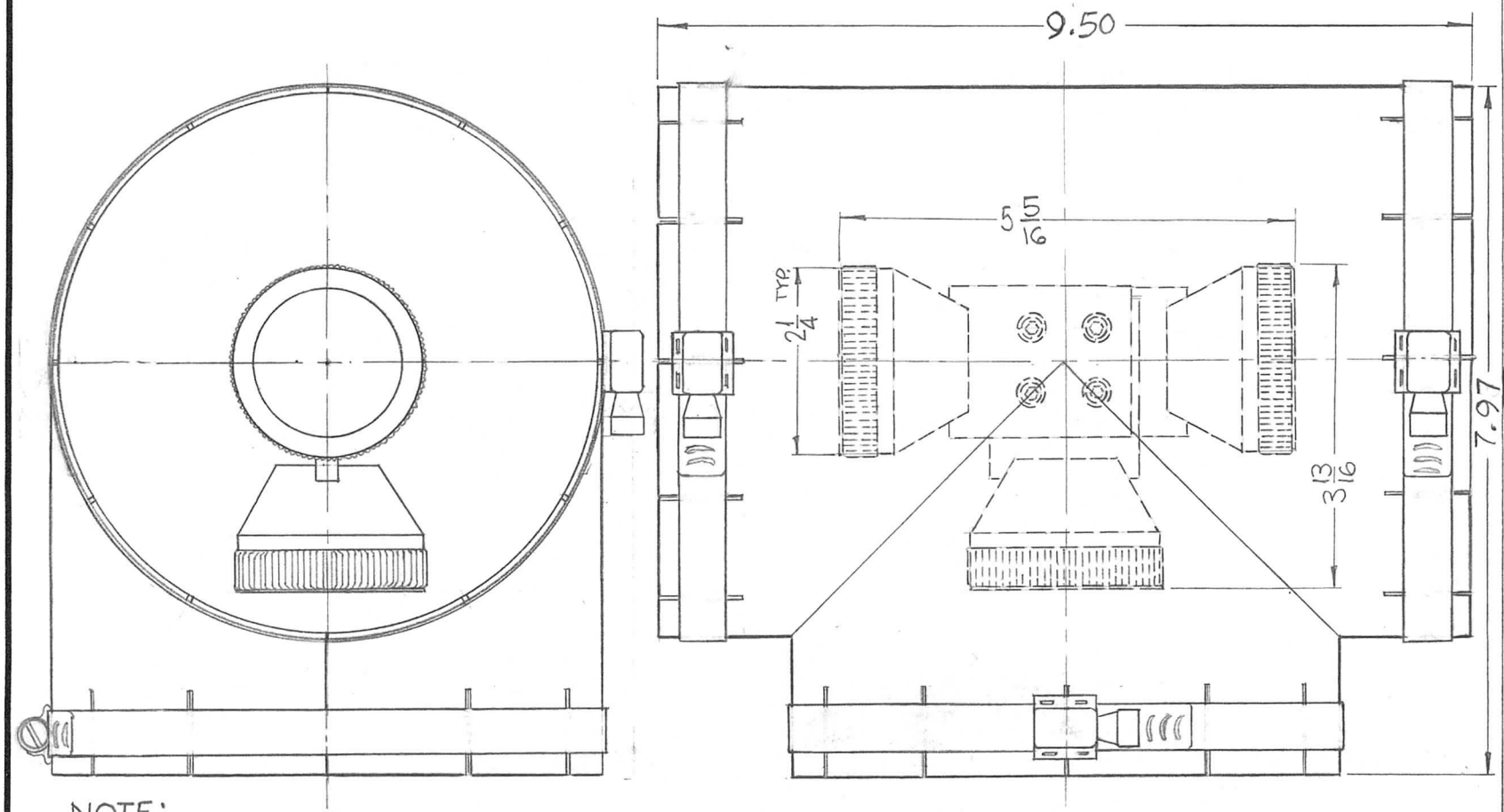

NOTE:
ALL DIMENSIONS FOR REF: ONLY

SYM	DESCRIPTION	DATE	CH. NO.	DRAFTS	CHECKER	ENG. APP.
A	9.50 WAS 9 7/16; 5 5/16 WAS 5 3/8; 7.97 WAS 8	1/17/66	15530	HLA	JCB	aa
0	ORIG. RELEASE FOR PROD.	5-16-64		SRG		

UNLESS OTHERWISE SPECIFIED
DIMENSIONS ARE IN INCHES AND INCLUDE
CHEMICALLY APPLIED OR PLATED FINISHES

DECIMALS .X ±.05 .XX ±.01 .XXX ±.005 — TOLERANCES — FRACTIONS ± 1/64 ANGLES ± 0° 30′

SCALE 1/2" = 1"

CODE C

REQ.	ITEM	PART NO.	DESCRIPTION	SYMBOL
			F. BUDETTI	

STOCK SIZE

MATERIAL

TYPE & TEMPER | HEAT TREAT. SPEC.

FINISH & SPEC. NO.

THE TECHNICAL MATERIEL CORP.
MAMARONECK. NEW YORK

TEE ASS'Y, RF. TRANS. LINE, 6 1/8

DRAWN	CHECKED	FINAL APPROVAL
SRG	aa	RAC

ELEC. DES. APP.	MECH. DES. APP.	PO 278	A
JHB	[illegible] 4/10/64		