THE CONTENTS OF THIS DRAWING ARE THE EXCLUSIVE PROPERTY OF THE TECHNICAL MATERIEL CORP. ITS UNAUTHORIZED USE OR REPRODUCTION IN WHOLE OR IN PART IS STRICTLY FORBIDDEN.

PM-732

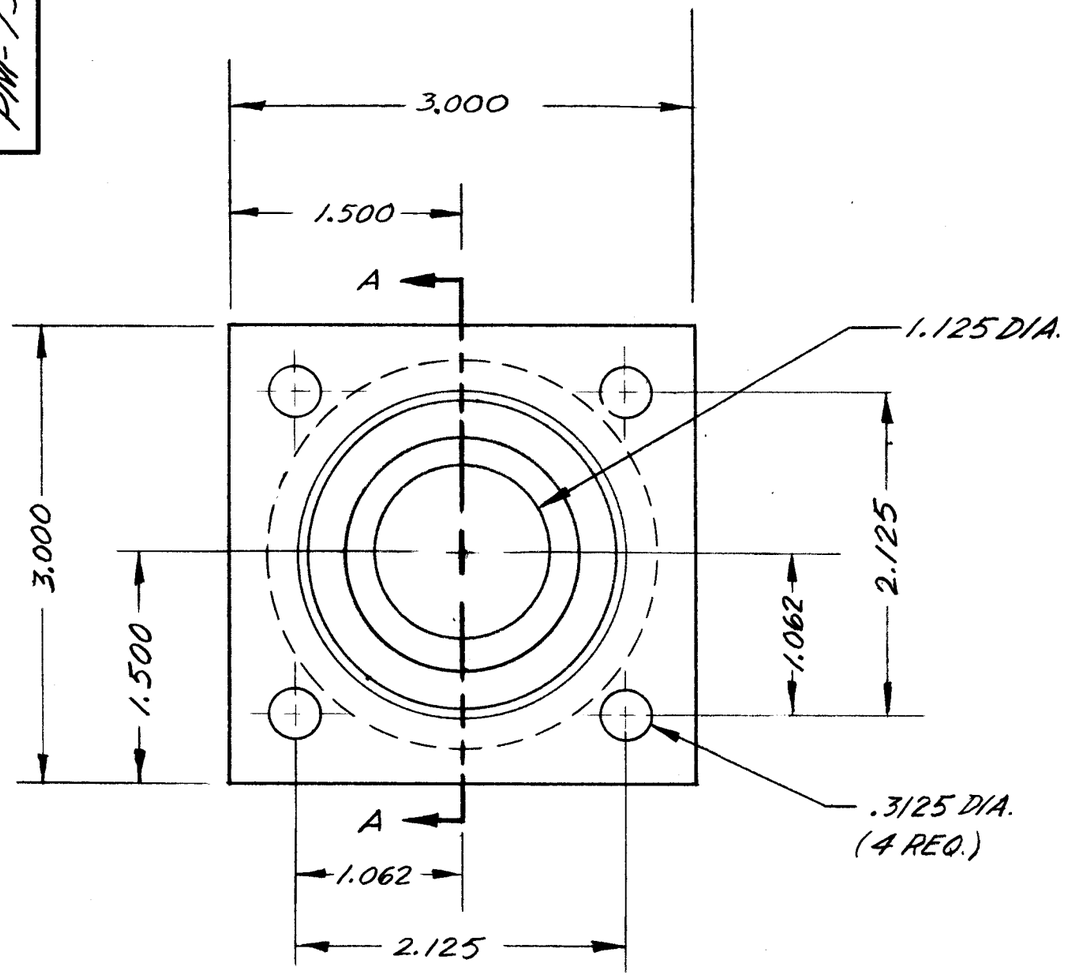

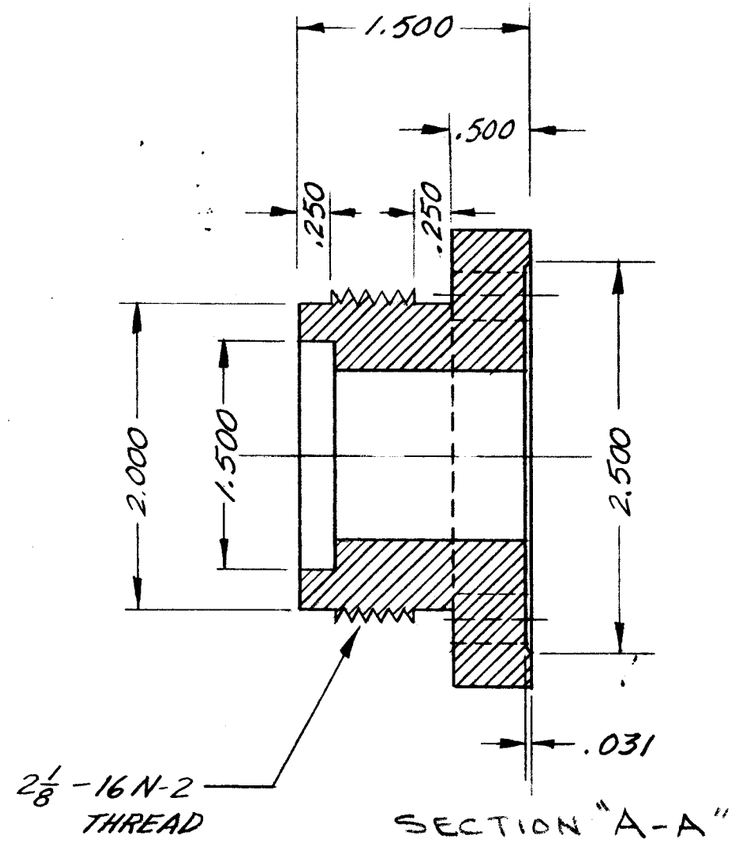

NOTICE TO PERSONS RECEIVING THIS DRAWING

THE TECHNICAL MATERIEL CORPORATION claims proprietary right in the material disclosed hereon. This drawing is issued in confidence for engineering information only and may not be reproduced or used to manufacture anything shown hereon without permission from THE TECHNICAL MATERIEL CORPORATION to the user. This drawing is loaned for mutual assistance and is subject to recall at any time.

Property of:

THE TECHNICAL MATERIEL CORPORATION
MAMARONECK, NEW YORK

REQ.	ITEM	PART NO.	DESCRIPTION	SYMBOL

STOCK SIZE	THE TECHNICAL MATERIEL CORP. MAMARONECK, NEW YORK
BRASS	COUPLING, FLANGE, MACHINING
MATERIAL	
TYPE & TEMPER / HEAT TREAT. SPEC.	DRAWN: wh / CHECKED: [illegible] / FINAL APPROVAL: [illegible]
SEMI-GLOSS OLIVE DRAB	ELEC. DES. APP. / MECH. DES. APP. / PM-732
FINISH & SPEC. NO.	

SYM	DESCRIPTION	DATE	CH. NO.	DRAFTS	CHECKER	ENG. APP.

UNLESS OTHERWISE SPECIFIED:
DIMENSIONS ARE IN INCHES
TOLERANCES ON
FRACTIONS ± 1/64 DECIMALS ± .005 ANGLES ± 1/2°

A

SCALE: DO NOT SCALE

MAXIMUM ALLOWABLE TOLERANCES HAVE BEEN DETERMINED AND ANY DEVIATIONS WILL BE CAUSE FOR REJECTION. REMOVE ALL BURRS AND SHARP EDGES

REQ. PER UNIT	MODEL	SECTION	ASS'Y. NO.	DATE

USED ON

TMC FORM NO. 109

DEFIANCE NO. 1020 36845