REQ. PER UNIT	USED ON MODEL	ASS'Y. NO.	DATE
4	RTM 750		10-5-55
4	RTM-2		10-16-58

PM-369 A

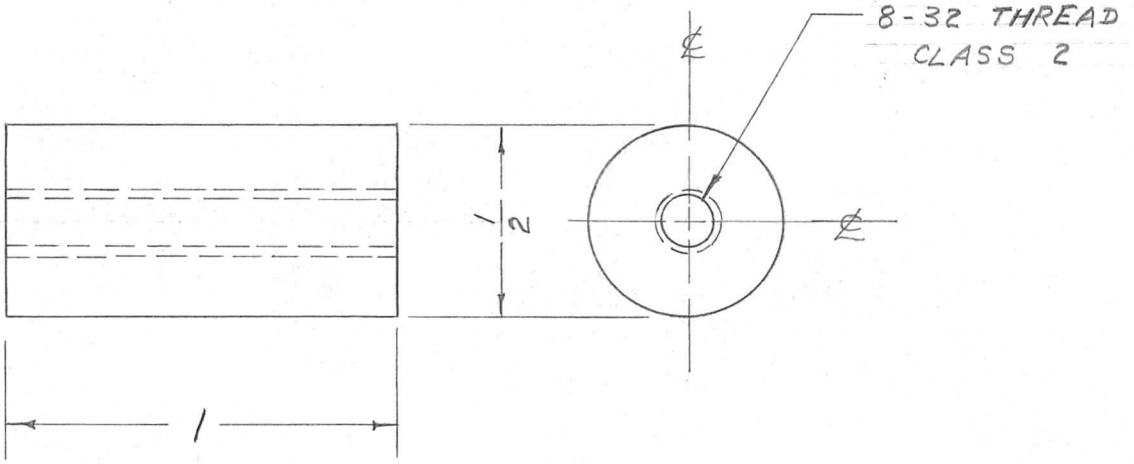

ISSUE	ITEM	CHANGED FROM	DATE	CH. NO.	DRAFTS	CHECKER	ENG. APP.
A	1	FINISH WAS CAD. PLATE	10/19/56	1	[illegible]	[illegible]	[illegible]

TOLERANCES

DEC. DIM. ±
FRAC. DIM. ± 1/64
ANGULAR DIM. ±

SCALE:

MAXIMUM ALLOWABLE TOLERANCES HAVE BEEN DETERMINED AND ANY DEVIATIONS WILL BE CAUSE FOR REJECTION.
REMOVE ALL BURRS AND SHARP EDGES

REQ.	ITEM	PART NO.	DESCRIPTION	SYMBOL
		1/2 x 1 ROD	THE TECHNICAL MATERIEL CORP. MAMARONECK. NEW YORK	
		STOCK SIZE	SPACER TUBE SOCKET	
		ALUMINUM	MODULATOR	
		MATERIAL		

TYPE & TEMPER	HEAT TREAT. SPEC.	DRAWN	CHECKED	FINAL APPROVAL
2011-T3	—	PB	[illegible]	A. J. J.

FINISH & SPEC. NO.	ELEC. DES. APP.	MECH. DES. APP.	
S-101 CAUSTIC DIP S-104 LACQUER		[illegible]	PM-369 A