UNLESS OTHERWISE SPECIFIED:
MARKING PROCESS:
AS PER TMC SPEC
S-727
LETTERING 1/8 HIGH
BLACK GOTHIC.

REQ. PER UNIT	USED ON MODEL	ASS'Y. NO.	DATE
1	TCP-1	—	4-29-66
1	TCP-2	A5254	6-17-66

LD2104 Ø

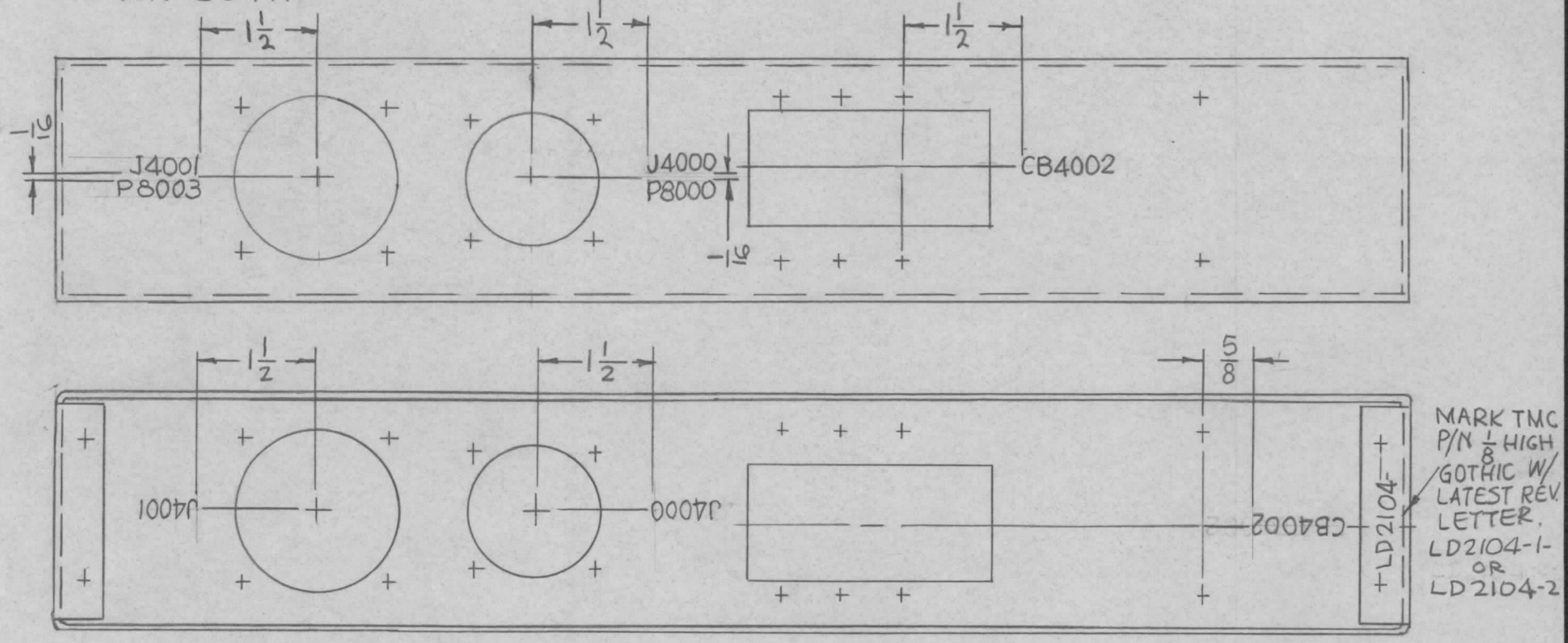

LD2104-1 AS SHOWN
LD2104-2 EXCLUDE CB4002 & CUTOUT.

MS4996-1/LD2104-1
REF: MS4996-2/LD2104-2

SYM	DESCRIPTION	DATE	CH. NO.	DRAFTS	CHECKER	ENG. APP.
Ø	ORIGINAL RELEASE FOR PRODUCTION	12.13.66	~~[illegible]~~	[illegible]		
X	EXP. RELEASE	6-17-66	X	[illegible]		[illegible]

UNLESS OTHERWISE SPECIFIED
DIMENSIONS ARE IN INCHES AND INCLUDE CHEMICALLY APPLIED OR PLATED FINISHES

SCALE 1/2

DECIMALS .X ±.05 .XX ±.01 .XXX ±.005 — TOLERANCES — FRACTIONS ± 1/64 ANGLES ± 0° 30′

CODE A

REQ.	ITEM	PART NO.	DESCRIPTION	SYMBOL
			F. BUDETTI	

STOCK SIZE

MATERIAL

TYPE & TEMPER | HEAT TREAT. SPEC.

FINISH & SPEC. NO.

THE TECHNICAL MATERIEL CORP.
MAMARONECK. NEW YORK

MARKING, CHASSIS CONTROL PANEL
AS PER TMC SPEC. S-727

DRAWN	CHECKED	FINAL APPROVAL
[illegible]	[illegible]	[illegible]

ELEC. DES. APP.	MECH. DES. APP.	
[illegible]	[illegible]	LD2104 Ø

TMC FORM 108-A — REPROVEL NO. 440H — 33845