REQ. PER UNIT	USED ON			JJ-294	A
	MODEL	ASS'Y. NO.	DATE		

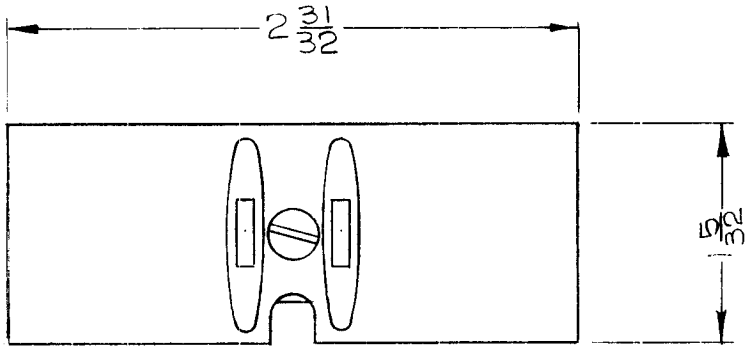

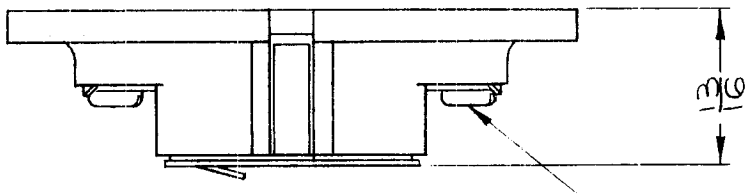

SCREW, #6-32 THD

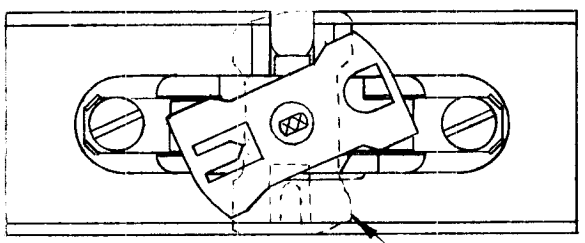

SEE NOTE

SPECIFICATIONS

A. CONTACT DATA
1. STYLE: TWO CONTACTS FLAT PARALELL POLARIZED; ONE CONTACT ROUND FOR GROUNDING.
2. CURRENT RATING: 10A., 15A.
3. ACWV: 250V, 125V.
4. MATERIAL: COPPER

B. SHELL MATERIAL: BLACK BAKELITE

C. POLARIZATION: CONTACT POSITIONS

D. CABLE DATA
1. MAX. WIRE SIZE: 3 NO. 12 WIRES.

NOTE: GROUNDING CIRCUIT IS COMPLETED TO STRIP CHANNEL, WHEN LOCKING BAR IS ROTATED AS SHOWN.

REF: PO-160, PL-218

SYM	DESCRIPTION	DATE	CH. NO.	DRAFTS	CHECKER	ENG. APP.
A	UPDATED & CLARIFIED DWG.	10/8/63	10159	[illegible]	[illegible]	[illegible]

REQ.	ITEM	PART NO.	DESCRIPTION	SYMBOL
			JOHNSON	

THE TECHNICAL MATERIEL CORP.
MAMARONECK, NEW YORK

STOCK SIZE

CONNECTOR, RECEPTACLE
3 CONTACT, GROUNDING TYPE

MATERIAL

UNLESS OTHERWISE SPECIFIED
DIMENSIONS ARE IN INCHES AND INCLUDE CHEMICALLY APPLIED OR PLATED FINISHES

SCALE

TYPE & TEMPER | HEAT TREAT. SPEC.

DRAWN: R. Chiavetta 8-21-63 | CHECKED: [illegible] 9/12/63 | FINAL APPROVAL: [illegible]

DECIMALS .X ±.05 .XX ± .01 .XXX ± .005 — TOLERANCES — FRACTIONS ± 1/64 ANGLES ± 0° 30'

CODE

FINISH & SPEC. NO.

ELEC. DES. APP.: [illegible] 9/12 | MECH. DES. APP.: [illegible] 9/12

JJ-294 | A

TMC FORM 108-A

STOCK NO. 440H