REQ. PER UNIT	USED ON			JJ-291
	MODEL	ASS'Y. NO.	DATE	

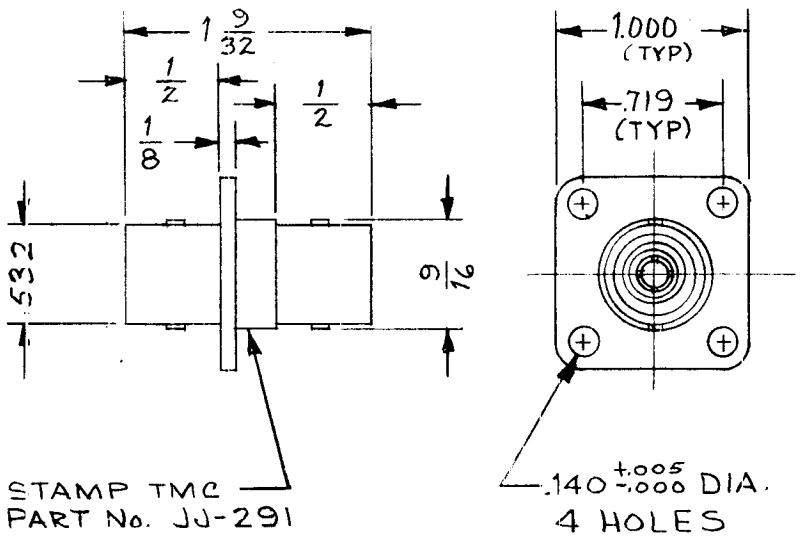

SPECIFICATIONS:
Series - "C"
No. of Contacts - One (1)
Type of Contact - Female
Dielectric - Teflon

ELECTRICAL DATA:
Max. Peak Opr. Volt - 1500 V
Freq. Limit - 10,000 MCS
Nominal Impedance - 50Ω

CABLE ACCOMMODATIONS:
Type - None

MATING ACCOMMODATIONS:
Type - C

MATERIAL:
External Parts - Brass
Contact - Beryllium Copper

FINISH:
External Parts - Silver Plate & Rhodium Flash
Contact - Silver Plate & Gold Flash

PANEL:
Max. Thickness - 3/16

SYM	DESCRIPTION	DATE	CH. NO.	DRAFTS	CHECKER	ENG. APP.

UNLESS OTHERWISE SPECIFIED
DIMENSIONS ARE IN INCHES AND INCLUDE
CHEMICALLY APPLIED OR PLATED FINISHES

SCALE

DECIMALS .X ±.05 .XX ±.01 .XXX ±.005 — TOLERANCES — FRACTIONS ± 1/64 ANGLES ± 0° 30′

CODE S401-70-2962

REQ.	ITEM	PART NO.	DESCRIPTION	SYMBOL

STOCK SIZE

MATERIAL

TYPE & TEMPER | HEAT TREAT. SPEC.

FINISH & SPEC. NO.

MARTINENGO

THE TECHNICAL MATERIEL CORP.
MAMARONECK, NEW YORK

ADAPTER, CONNECTOR
C (F) TO C (F)

DRAWN	CHECKED	FINAL APPROVAL
M TANTILLO 9-18-63	9/23/63	BP

ELEC. DES. APP. | MECH. DES. APP. | JJ-291

TMC FORM 108-A

STOCK NO. 440H