JJ-229

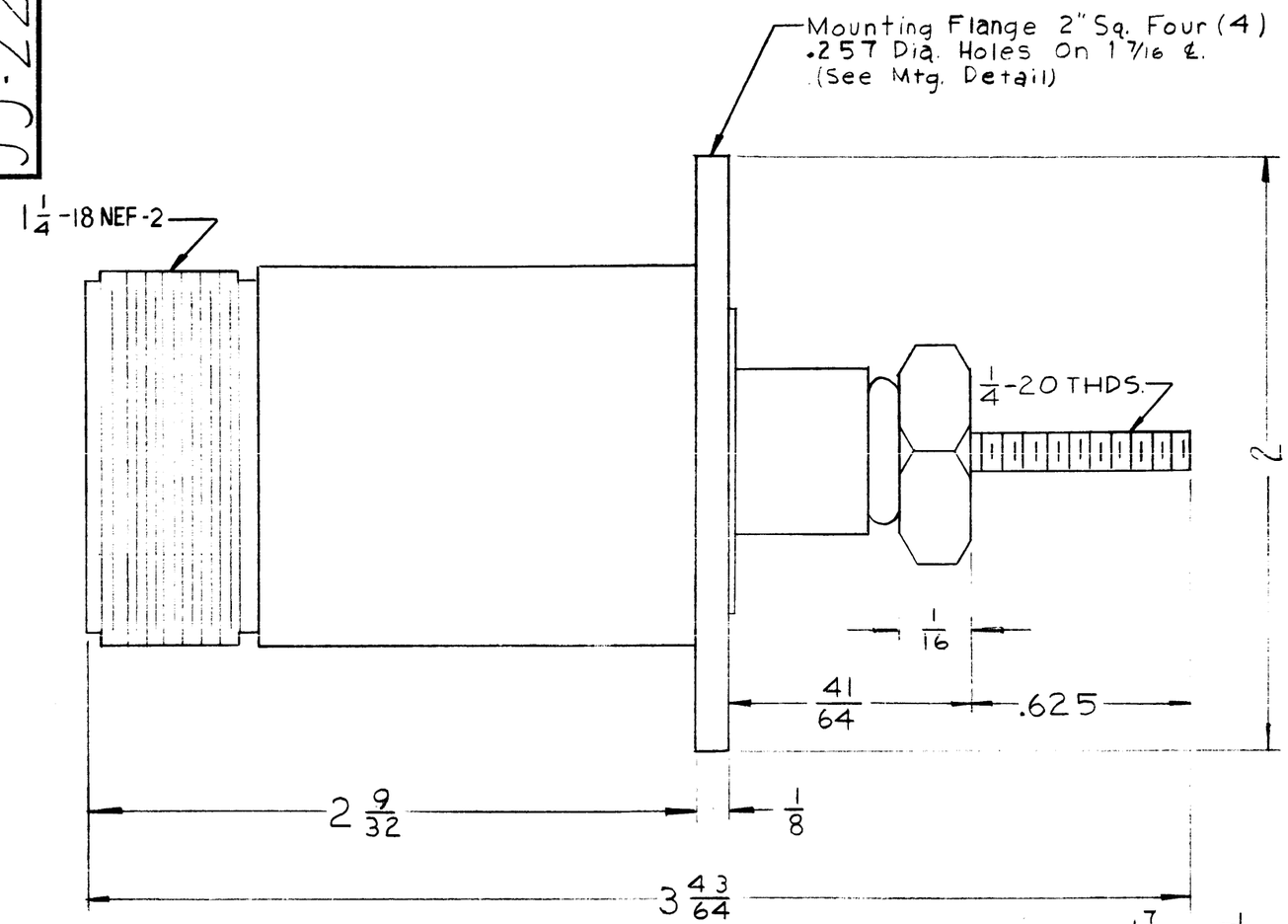

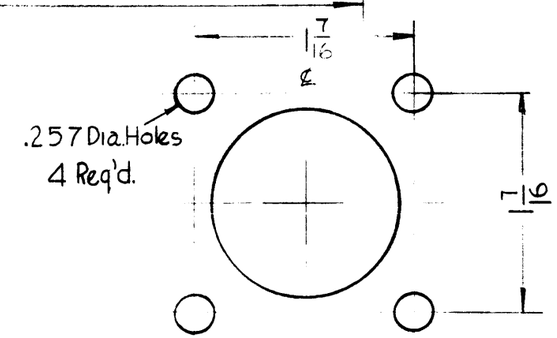

MOUNTING DETAIL

SPECIFICATIONS

SERIES	~ LC
NO. OF CONTACTS	~ ONE (1)
TYPE OF CONTACT	~ FEMALE
DIELECTRIC	~ TEFLON

ELECTRICAL DATA

MAX. PEAK OPR. VOLTAGE	~10 KV
NOMINAL IMPEDANCE	50 Ω

MATERIAL

EXTERNAL PARTS	~ BRASS
CONTACTS	~ BERYLLIUM COPPER

FINISH

EXTERNAL PARTS	~ SILVER PLATE & RHODIUM FLASH
CONTACTS	~ SILVER PLATE & GOLD FLASH

NOTICE TO PERSONS RECEIVING THIS DRAWING

THE TECHNICAL MATERIEL CORPORATION claims proprietary right in the material disclosed hereon. This drawing is issued in confidence for engineering information only and may not be reproduced or used to manufacture anything shown hereon without permission from THE TECHNICAL MATERIEL CORPORATION to the user. This drawing is loaned for mutual assistance and is subject to recall at any time.

Property of:

THE TECHNICAL MATERIEL CORPORATION
MAMARONECK, NEW YORK

SYM	DESCRIPTION	DATE	CH. NO.	DRAFTS	CHECKER	ENG. APP.

UNLESS OTHERWISE SPECIFIED:
DIMENSIONS ARE IN INCHES
TOLERANCES ON
FRACTIONS ± 1/64 DECIMALS ± .005 ANGLES ± 1/2°

SCALE: S-401-70-(2371)

MAXIMUM ALLOWABLE TOLERANCES HAVE BEEN DETERMINED AND ANY DEVIATIONS WILL BE CAUSE FOR REJECTION.
REMOVE ALL BURRS AND SHARP EDGES

REQ. PER UNIT	MODEL	SECTION	ASS'Y. NO.	DATE
				10-24-61

USED ON

REQ.	ITEM	PART NO.	DESCRIPTION	SYMBOL

STOCK SIZE

MATERIAL

TYPE & TEMPER | HEAT TREAT. SPEC.

FINISH & SPEC. NO.

THE TECHNICAL MATERIEL CORP.
MAMARONECK, NEW YORK

CONNECTOR, RECEPTACLE
LC SERIES

DRAWN	CHECKER	FINAL APPROVAL
EE	JWe	OJB

ELEC. DES. APP.	MECH. DES. APP.	
aa		JJ-229

TMC FORM NO. 109

DEFIANCE NO. 1 2 36552