DIM. FOR REF. ONLY

REQ. PER UNIT	USED ON			JJ-215
	MODEL	ASS'Y. NO.	DATE	

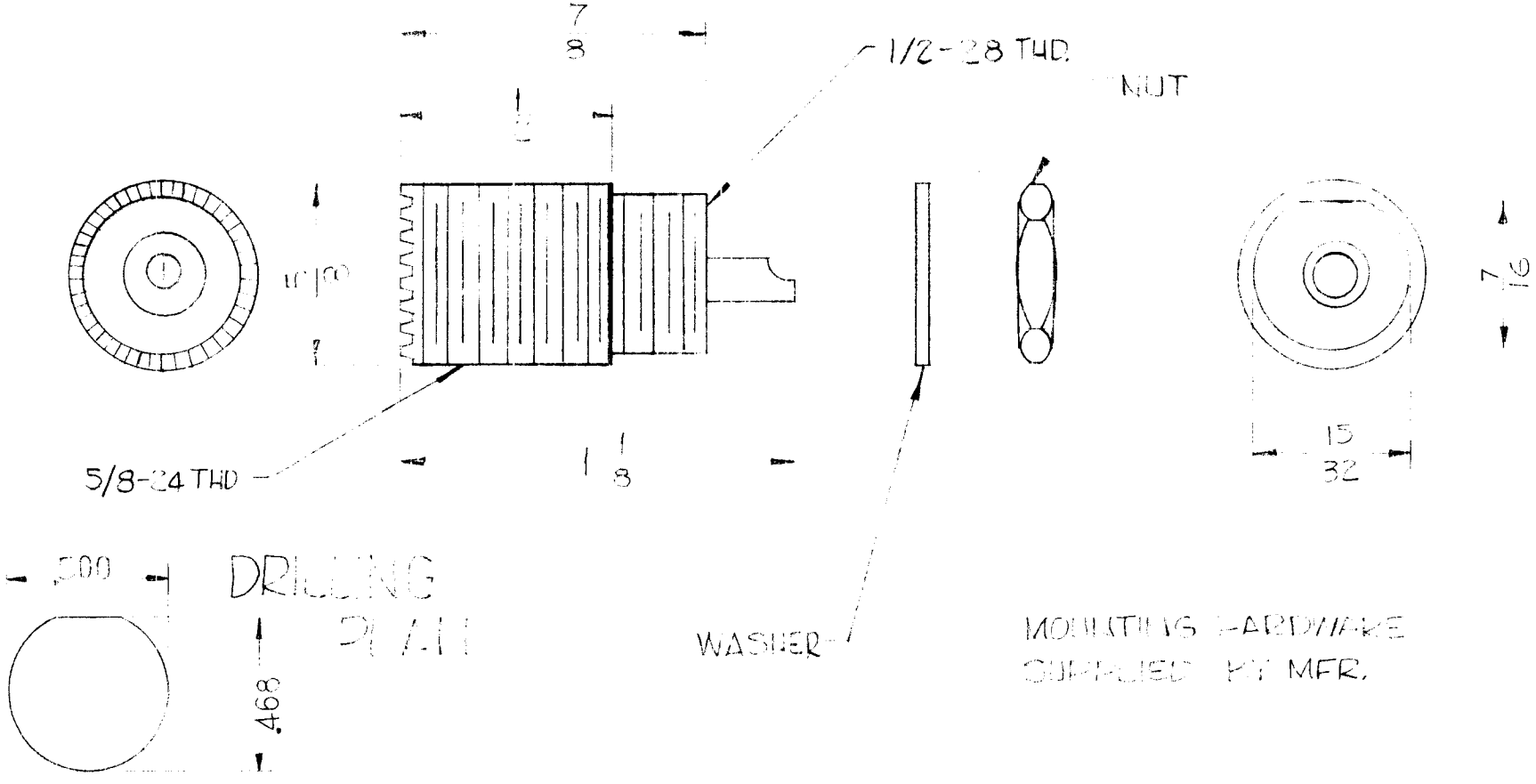

ISSUE	ITEM	CHANGED FROM	DATE	CH. NO.	DRAFTS	CHECKER	ENG. APP.

TOLERANCES

DEC. DIM. ±
FRAC. DIM. ±
ANGULAR DIM. ±

SCALE: S-401-139- #6804

MAXIMUM ALLOWABLE TOLERANCES HAVE BEEN DETERMINED AND ANY DEVIATIONS WILL BE CAUSE FOR REJECTION.
REMOVE ALL BURRS AND SHARP EDGES

REQ.	ITEM	PART NO.	DESCRIPTION	SYMBOL

STOCK SIZE

MATERIAL

TYPE & TEMPER | HEAT TREAT. SPEC.

FINISH & SPEC. NO.

THE TECHNICAL MATERIEL CORP.
MAMARONECK, NEW YORK

RECEPTACALE, UHF

DRAWN	CHECKED	FINAL APPROVAL
RUZZO		
ELEC. DES. APP	MECH. DES. APP	JJ-215

FORM 108-A