REQ. PER UNIT	USED ON MODEL	ASS'Y. NO.	DATE	CZ 101	A
1	VLRB-1		7/2/64		

GEAR DATA	
PITCH	48
Nº OF TEETH	50
PITCH DIA	1.0416
O. D.	1.0833
PRESS. ANGLE	20°

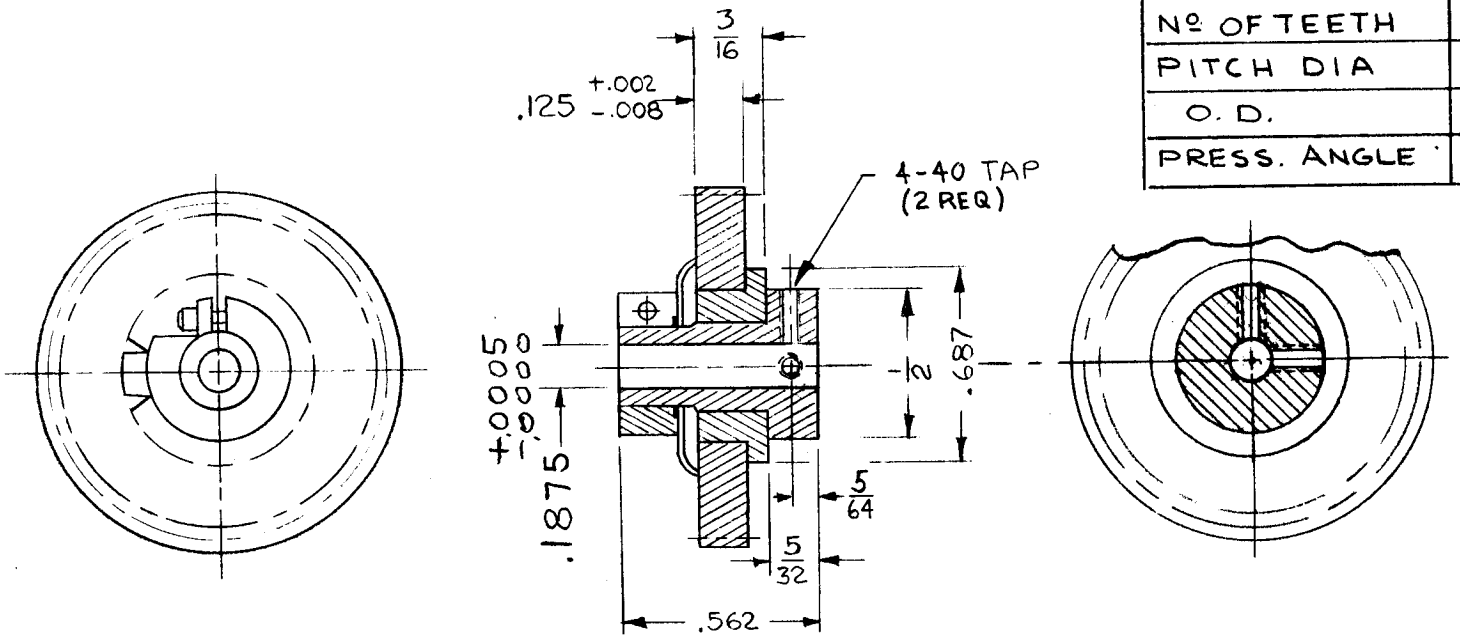

SYM	DESCRIPTION	DATE	CH. NO.	DRAFTS	CHECKER	ENG. APP.
A	ON PICT. "3/64 DR. PARTWAY" & "REF: DYNAMIC..." DELET. SIDE VIEW & 5/64 DIM. ADD. "4-40 TAP (2 REQ)" WAS "2-56 TAP" "S401-346 (MSC150-50) ADD.	11-25-64	12997	R.L.		
Ø	~~ORIGINAL RELEASE FOR~~ PRODUCTION	9-30-64	Ø	R.L.		
X	EXPER. RELEASE	7/2/64		WB		

UNLESS OTHERWISE SPECIFIED DIMENSIONS ARE IN INCHES AND INCLUDE CHEMICALLY APPLIED OR PLATED FINISHES

TOLERANCES: DECIMALS .X ±.05, .XX ±.01, .XXX ±.005; FRACTIONS ± 1/64; ANGLES ± 0° 30′

SCALE: NONE

CODE: C

S401-346 (MSC150-50)

REQ.	ITEM	PART NO.	DESCRIPTION	SYMBOL

STOCK SIZE: —

MATERIAL: STAINLESS STEEL

TYPE & TEMPER: #303 — HEAT TREAT. SPEC.: —

FINISH & SPEC. NO.: PASSIVATE

T. KRUY

THE TECHNICAL MATERIEL CORP.
MAMARONECK. NEW YORK

CLUTCH, SLIP

DRAWN	CHECKED	FINAL APPROVAL
WB 7.2.64	8-28-64	
ELEC. DES. APP.	MECH. DES. APP.	CZ 101 A

REPROVEL NO. 440H 16106

TMC FORM 108-A

REQ. PER UNIT	USED ON MODEL	ASS'Y. NO.	DATE	CZ102	Ø
1	RFTA-1		3-8-65		

GEAR DATA

NO. OF TEETH ~ 25.

PITCH DIA ~ 1.177 $^{+.000}_{-.002}$

OUTER DIA ~ 1.228 $^{+.000}_{-.004}$

PITCH ~ .1475

MATERIAL ~ STAINLESS STEEL (303)

FINISH ~ S104 PASSIVATE (GEAR ONLY)

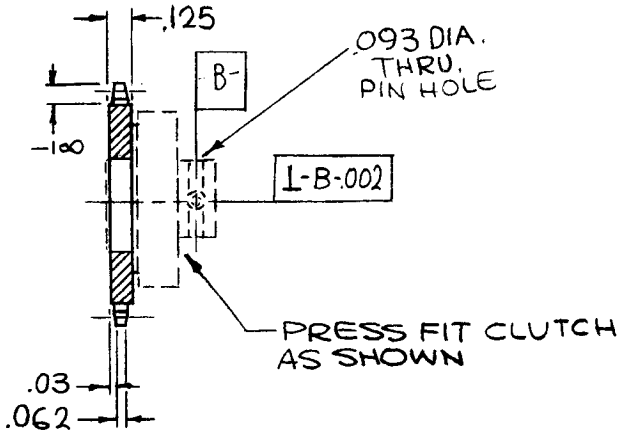

GEAR & CLUTCH

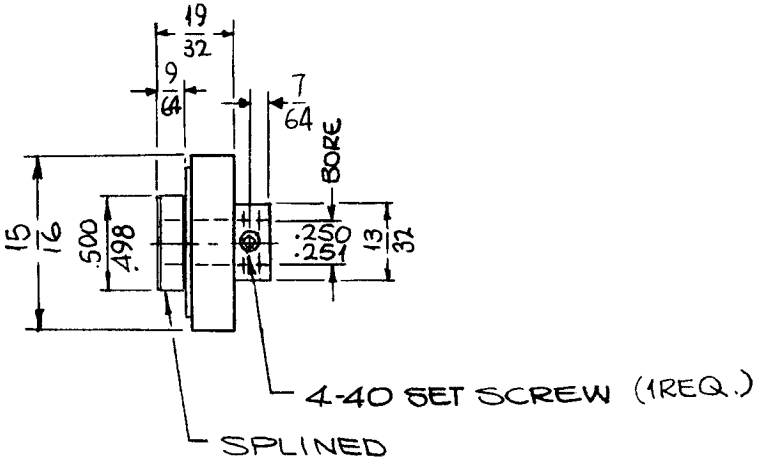

CLUTCH

SYM	DESCRIPTION	DATE	CH. NO.	DRAFTS	CHECKER	ENG. APP.
Ø	ORIGINAL RELEASE FOR PRODUCTION	10-5-65	*	E		
X1	7/64, ⊥PERP, .093 HOLE ADDED S104 ADDED	9-30-65	X1	MLZ		
X	EXP. RELEASE	3-8-65	X	SRG		

UNLESS OTHERWISE SPECIFIED DIMENSIONS ARE IN INCHES AND INCLUDE CHEMICALLY APPLIED OR PLATED FINISHES

SCALE 1:1

TOLERANCES: DECIMALS .X ±.05, .XX ±.01, .XXX ±.005; FRACTIONS ± 1/64; ANGLES ± 0° 30′

CODE C

HELANDER D75 A L.H.

REQ.	ITEM	PART NO.	DESCRIPTION	SYMBOL

STOCK SIZE

MATERIAL

TYPE & TEMPER | HEAT TREAT. SPEC.

FINISH & SPEC. NO.

F. BUDETTI

THE TECHNICAL MATERIEL CORP.
MAMARONECK, NEW YORK

CLUTCH & GEAR

DRAWN: SRG | CHECKED | FINAL APPROVAL

ELEC. DES. APP. | MECH. DES. APP.

CZ102 Ø

TMC FORM 108-A

REPROVEL NO. 440H 23845

REQ. PER UNIT	USED ON			CZ 103	
	MODEL	ASS'Y. NO.	DATE		
1	AFCR		3-29-65		

GEAR DATA

	GEAR #1	GEAR #2
PITCH	48	64
NO. OF TEETH	50	120
P.D.	1.0417	1.8750
O.D.	1.0833	1.9062
PRESSURE ANGLE	20°	20°

NOTE:

GEARS, HUB & CLAMP
STAINLESS STEEL #303
[illegible]

SYM	DESCRIPTION	DATE	CH. NO.	DRAFTS	CHECKER	ENG. APP.
	[illegible]					

UNLESS OTHERWISE SPECIFIED
DIMENSIONS ARE IN INCHES AND INCLUDE
CHEMICALLY APPLIED OR PLATED FINISHES

SCALE

TOLERANCES
DECIMALS .X ±.05 .XX ± .01 .XXX ± .005
FRACTIONS ± 1/64
ANGLES ± 0° 30′

CODE 040-[illegible]
([illegible])

REQ.	ITEM	PART NO.	POSE	DESCRIPTION	SYMBOL

STOCK SIZE: See Note

MATERIAL

TYPE & TEMPER | HEAT TREAT. SPEC.

FINISH & SPEC. NO.

THE TECHNICAL MATERIEL CORP.
MAMARONECK, NEW YORK

SLIP CLUTCH & GEARS ASS'Y.

DRAWN	CHECKED	FINAL APPROVAL
A. AUSTIN	[illegible]	[illegible]

ELEC. DES. APP. | MECH. DES. APP.

CZ 103

TMC FORM 108-A

REPROVEL NO. 440H 23645

APPLICATION			REVISIONS						
QTY	MODEL USED ON	ASS'Y NO.	LTR	DESCRIPTION	DATE	E.M.N.NO	DRAFT	CHKD	APPD
	HFRR-4		X	EXPERIMENTAL RELEASE	8/22/68		R.V.		
			Ø	ORIG. RELEASE FOR PROD.	9-11-68	Ø	R.G.		
			A	DIM. .3746 WAS .3476	12/31/68	19167	LH		FB

TMC P/N	CATALOG NO.	"B"
CZ104-1	AC29	.1200
-2	AC30	.1248
-3	AC31	.1873
-4	AC32	.2498

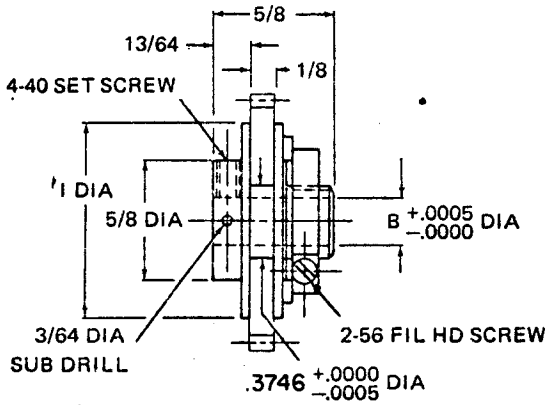

SPECIFICATIONS

TORQUE TO 50 IN OZ.

MATERIAL: HUB AND CLAMP, STAINLESS STEEL .303 CLEAR PASSIVATED
BRAKE, MIL-B-5687A OILITE BRONZE
SPRING WASHER, SPRING STEEL CADMIUM PLATED

UNLESS OTHERWISE SPECIFIED DIMENSIONS ARE IN INCHES AND INCLUDE CHEMICALLY APPLIED OR PLATED FINISHES

DECIMALS .X ± .05, .XX ± .01, .XXX ± .005 — TOLS. — FRACTIONS 1/64, ANGLES 0° ·30'

REQ'D	ITEM	PART NUMBER	DESCRIPTION	SYM.

LIST OF MATERIAL

FINAL APPROVAL		DATE
MECH. DES.		DATE
ELECT. DES.	M. ZETENA	DATE 9/5/68
CHECKED	JADe	DATE 9/5/68
DRAWN	H.L.	DATE 9.27.68

MATERIAL

FINISH

S401-472

THE TECHNICAL MATERIEL CORP.
MAMARONECK, NEW YORK

CLUTCH, SLIP ADJUSTABLE

SIZE	CODE IDENT. NO.	DWG NO.	ISSUE
A	82679	CZ 104	A
SCALE		SHEET OF	

NOTICE TO PERSONS RECEIVING THIS DRAWING
THE TECHNICAL MATERIEL CORPORATION claims proprietary right in the material disclosed hereon. This drawing is issued in confidence for engineering information only and may not be reproduced or used to manufacture anything shown hereon without permission from **THE TECHNICAL MATERIEL CORPORATION** to the user. This drawing is loaned for mutual assistance and is subject to recall at any time.

FCI-10-170 (10-66)