CK-613 B

REVISIONS

SYM	DESCRIPTION	DATE	E.M.N. NO.	DRAFT	CHKD	APPD
A	NOTE 2 & 3 ADD., ON MODEL U/O "1A" ADD., LEAD FROM TB1-1 TO P101 ADD.	8.13.64	12126	WJB		
B	ON P101: 115/230V WAS 115 VAC; "3/8 AMP" DELE. FROM F101; F101 FUSES NOTES ADDED.	3.31.65	13767	RL		

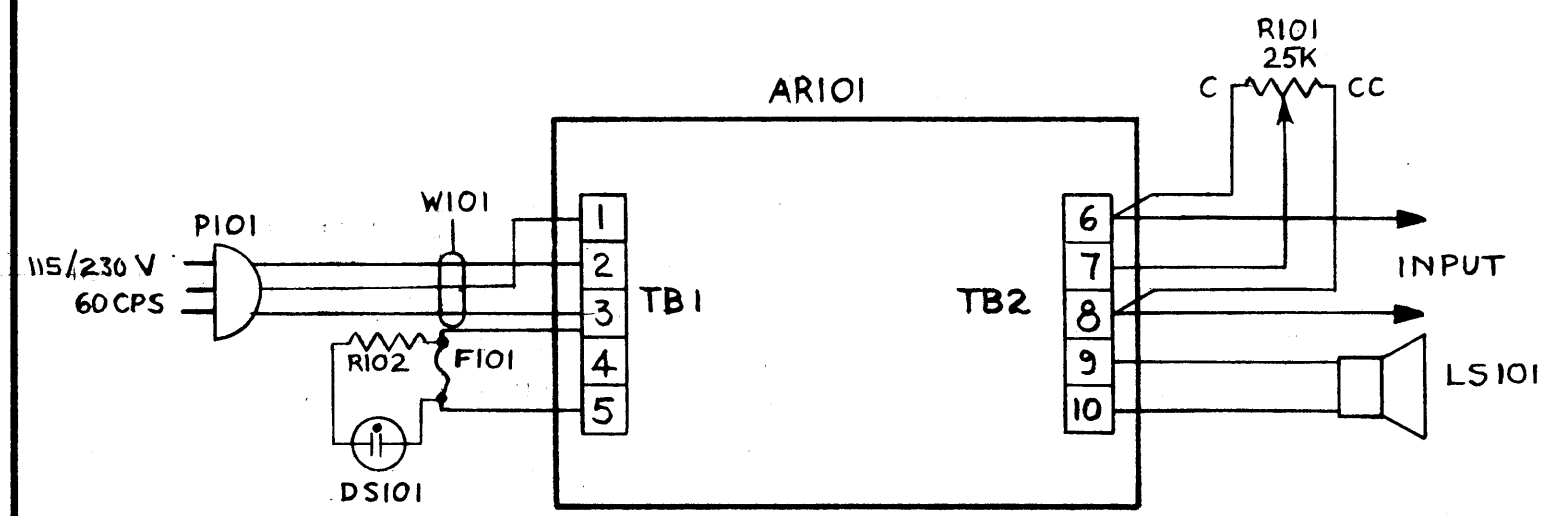

AUDIO AMPLIFER
(SEE NOTE 1)

FUSES F101:
1/4A FOR 115 V OPERATION
1/8 A FOR 230 V OPERATION

NOTE:
1. FOR SCHEMATIC DIAGRAM OF AUDIO AMPLIFIER (TMC NO. AZ-100) SEE CK-619
2. FOR SCHEMATIC DIAGRAM OF AUDIO AMPLIFIER AZ104 SEE CK 745
3. FOR SCHEMATIC DIAGRAM OF AUDIO AMPLIFIER AZ104A SEE CK 779

NOTICE TO PERSONS RECEIVING THIS DRAWING

THE TECHNICAL MATERIEL CORPORATION claims proprietary right in the material disclosed hereon. This drawing is issued in confidence for engineering information only and may not be reproduced or used to manufacture anything shown hereon without permission from THE TECHNICAL MATERIEL CORPORATION to the user. This drawing is loaned for mutual assistance and is subject to recall at any time.

Property of:

THE TECHNICAL MATERIEL CORPORATION
MAMARONECK, NEW YORK

NOTES

Q'T'Y./UNIT	MODEL USED ON	ASS'Y. NO.
1	BSP-1,1A	

SCALE | CODE

THE CONTENTS OF THIS DRAWING ARE THE EXCLUSIVE PROPERTY OF THE TECHNICAL MATERIEL CORP. ITS UNAUTHORIZED USE OR REPRODUCTION IN WHOLE OR IN PART IS STRICTLY FORBIDDEN.

REQ'D.	ITEM	PART NUMBER	DESCRIPTION	SYMBOL

J. STRUMER — **LIST OF MATERIAL**

MATERIAL

FINISH

UNLESS OTHERWISE SPECIFIED
DIMENSIONS ARE IN INCHES AND INCLUDE CHEMICALLY APPLIED OR PLATED FINISHES

TOLERANCES
DECIMALS: .X ± .05, .XX ± .01, .XXX ± .005
FRACTIONS: ± 1/64
ANGLES: ± 0° 30'

THE TECHNICAL MATERIEL CORP.
MAMARONECK, NEW YORK

TITLE: SCHEMATIC DIAGRAM

		DATE
DRAWN	N. Petro	12-17-62
CHECKED		4/3/63
ELECT. DES.		4-3-63
MECH. DES.		4-3-63

FINAL APPROVAL: BP — DATE

CK-613 — SHEET — REV. LTR. B

TMC FORM 109

REVISIONS						
SYM	DESCRIPTION	DATE	E.M.N. NO.	DRAFT	CHKD	APPD
A	NOTE 2 & 3 ADD. ON MODEL U/O ", 2A" ADD.	8.13.64	12126	JNB		
B	"3/8 AMP" DELE. FR. F101 & F102; P101 VOLT. WAS 115VAC; FUSE NOTES ADD.	3.31.65	13767	DZ		

B

CK-614

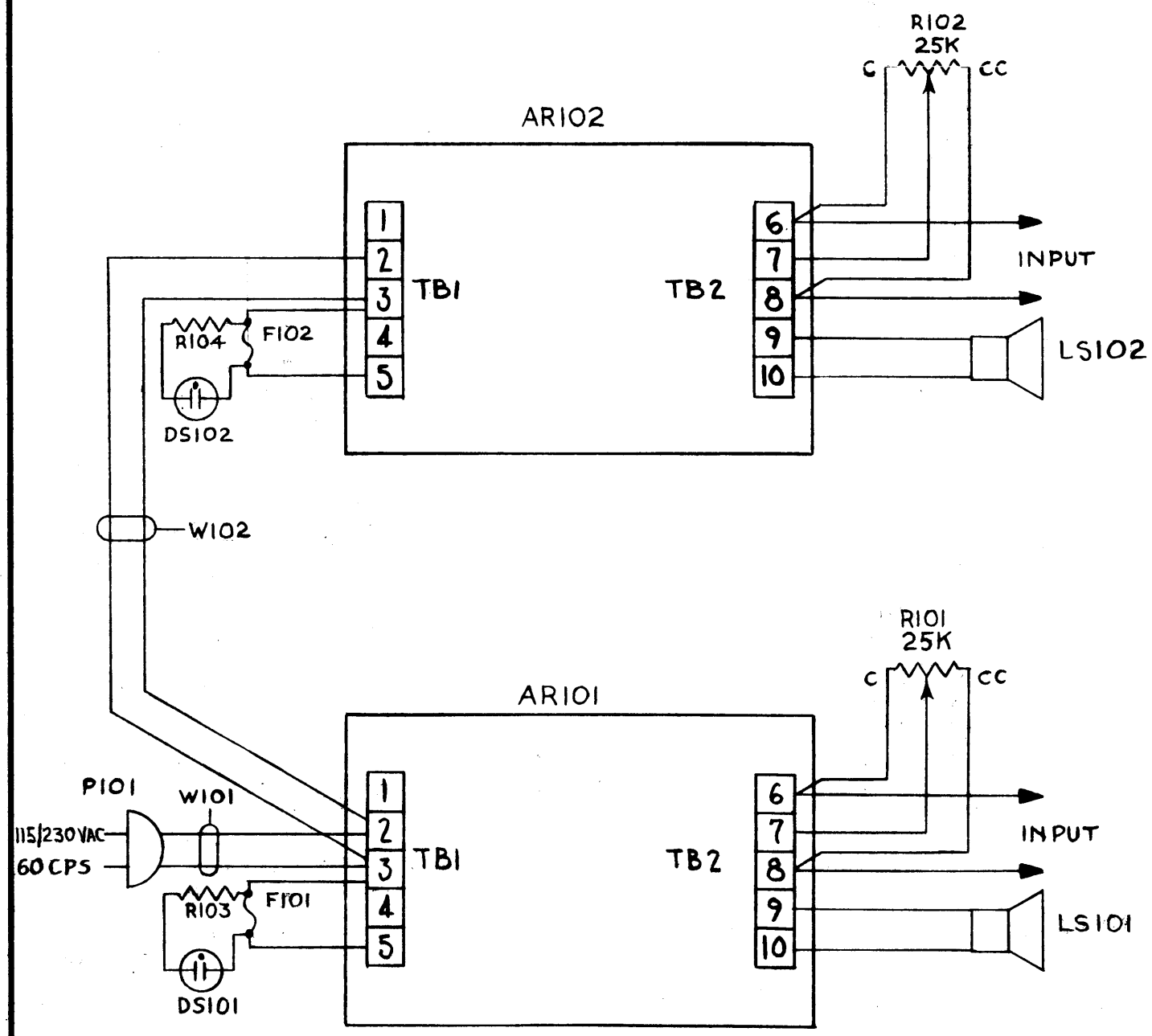

AUDIO AMPLIFIERS
(SEE NOTE 1)

FUSES F101 & F102:
1/4 A FOR 115V OPERATION
1/8 A FOR 230V OPERATION

NOTE:

1. FOR SCHEMATIC DIAGRAM OF AUDIO AMPLIFIERS (TMC NO. AZ-100) SEE CK-619.
2. FOR SCHEMATIC DIAGRAM OF AUDIO AMPLIFIER AZ104 SEE CK 745
3. FOR SCHEMATIC DIAGRAM OF AUDIO AMPLIFIER AZ104A SEE CK 779

NOTICE TO PERSONS RECEIVING THIS DRAWING

THE TECHNICAL MATERIEL CORPORATION claims proprietary right in the material disclosed hereon. This drawing is issued in confidence for engineering information only and may not be reproduced or used to manufacture anything shown hereon without permission from THE TECHNICAL MATERIEL CORPORATION to the user. This drawing is loaned for mutual assistance and is subject to recall at any time.

Property of:
THE TECHNICAL MATERIEL CORPORATION
MAMARONECK, NEW YORK

NOTICE TO PERSONS RECEIVING THIS DRAWING

THE TECHNICAL MATERIEL CORPORATION claims proprietary right in the material disclosed hereon. This drawing is issued in confidence for engineering information only and may not be reproduced or used to manufacture anything shown hereon without permission from THE TECHNICAL MATERIEL CORPORATION to the user. This drawing is loaned for mutual assistance and is subject to recall at any time.

Property of:
THE TECHNICAL MATERIEL CORPORATION
MAMARONECK, NEW YORK

REQ'D.	ITEM	PART NUMBER	DESCRIPTION	SYMBOL

J. STRUMER — LIST OF MATERIAL

MATERIAL

FINISH

THE TECHNICAL MATERIEL CORP.
MAMARONECK, NEW YORK

TITLE: SCHEMATIC DIAGRAM

Q'TY./UNIT	MODEL USED ON	ASS'Y. NO.
1	BSP-2, 2A	

SCALE | CODE

UNLESS OTHERWISE SPECIFIED
DIMENSIONS ARE IN INCHES AND INCLUDE CHEMICALLY APPLIED OR PLATED FINISHES

TOLERANCES
DECIMALS: .X ± .05, .XX ± .01, .XXX ± .005
FRACTIONS ± 1/64
ANGLES ± 0° 30'

DRAWN G. Sencan	DATE 12-15-62	FINAL APPROVAL	DATE
CHECKED	DATE 4/3/63		
ELECT. DESIGN	DATE 4-3-63	CK-614	B
MECH. DESIGN	DATE 4-3-63	SHEET	REV. LTR.

NOTES

THE CONTENTS OF THIS DRAWING ARE THE EXCLUSIVE PROPERTY OF THE TECHNICAL MATERIEL CORP. ITS UNAUTHORIZED USE OR REPRODUCTION IN WHOLE OR IN PART IS STRICTLY FORBIDDEN.

TMC FORM 109

REVISIONS						
SYM	DESCRIPTION	DATE	E.M.N. NO.	DRAFT	CHKD	APPD
A	NOTE 2 & 3 ADD. ON MODEL U/O ", 3A" ADD.	8.13.64	12126	WB		
B	ON F101, F102 & F103: "3/8 AMP" DELE; P101: 230 VAC ADD; FUSE NOTE ADDED.	4.2.65	13767			

B

CK-615

AUDIO AMPLIFIERS
(SEE NOTE 1)

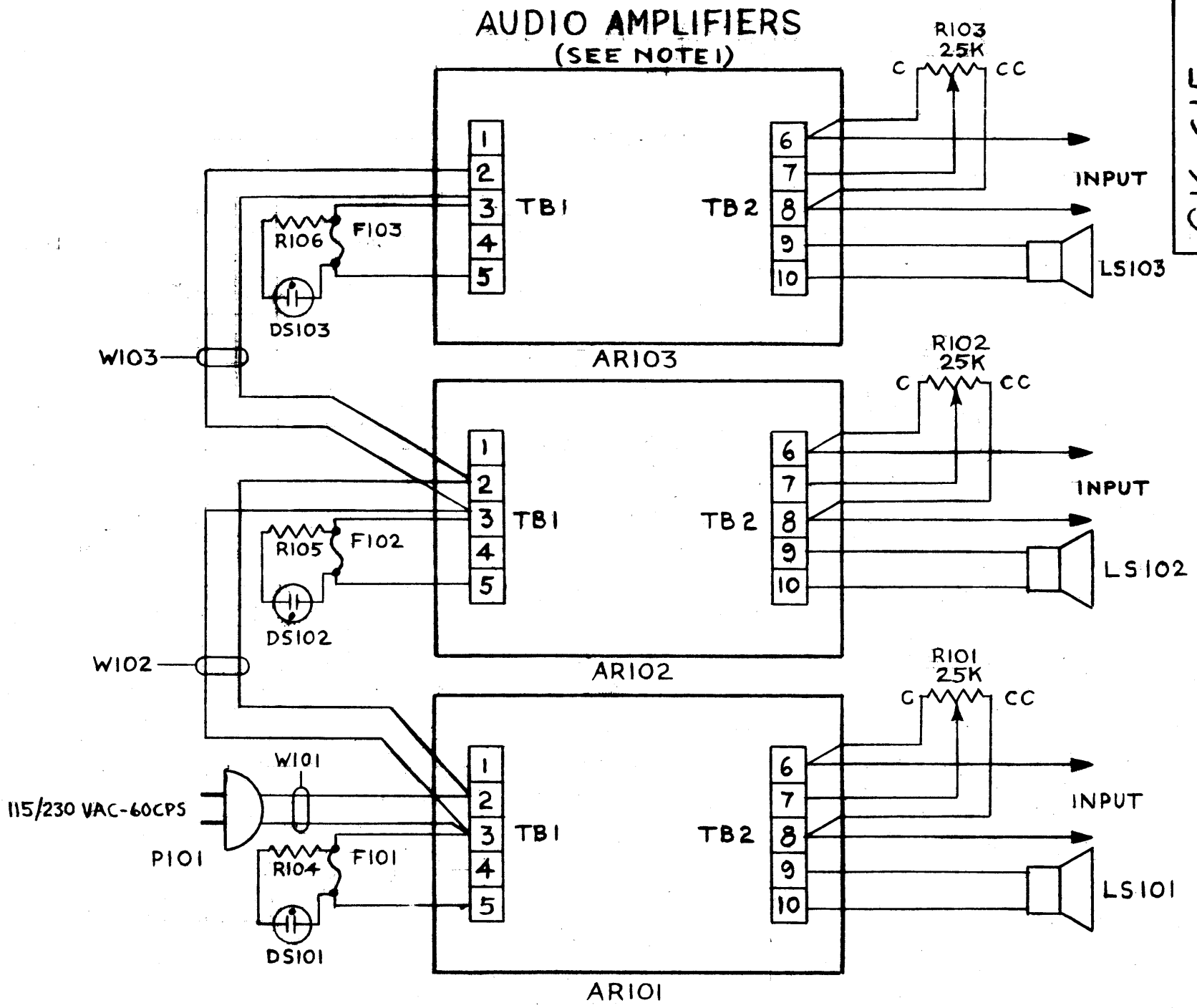

FUSES F101, F102 AND F103:
1/4A FOR 115 V OPERATION
1/8A FOR 230V OPERATION

NOTE:

1. FOR SCHEMATIC DIAGRAM OF AUDIO AMPLIFIERS (TMC NO. AZ-100) SEE CK-619.
2. FOR SCHEMATIC DIAGRAM OF AUDIO AMPLIFIER AZ104 SEE CK745
3. FOR SCHEMATIC DIAGRAM OF AUDIO AMPLIFIER AZ104A SEE CK779

NOTICE TO PERSONS RECEIVING THIS DRAWING

THE TECHNICAL MATERIEL CORPORATION claims proprietary right in the material disclosed hereon. This drawing is issued in confidence for engineering information only and may not be reproduced or used to manufacture anything shown hereon without permission from THE TECHNICAL MATERIEL CORPORATION to the user. This drawing is loaned for mutual assistance and is subject to recall at any time.

Property of:

THE TECHNICAL MATERIEL CORPORATION
MAMARONECK, NEW YORK

REQ'D.	ITEM	PART NUMBER	DESCRIPTION	SYMBOL
STRUMER			LIST OF MATERIAL	

MATERIAL		THE TECHNICAL MATERIEL CORP. MAMARONECK, NEW YORK			
FINISH		TITLE SCHEMATIC DIAGRAM			
		DRAWN N. Peter	DATE 12-17-62	FINAL APPROVAL BP	DATE
		CHECKED	DATE 4-3-63	CK-615	B
		ELECT. ENG.	DATE 4-3-63		
		MECH. ENG.	DATE 4-3-63	SHEET	REV. LTR.

Q'T'Y./UNIT	MODEL USED ON	ASS'Y. NO.
1	BSP-3,3A	

SCALE	CODE

UNLESS OTHERWISE SPECIFIED
DIMENSIONS ARE IN INCHES AND INCLUDE CHEMICALLY APPLIED OR PLATED FINISHES

TOLERANCES
DECIMALS: .X ± .05, .XX ± .01, .XXX ± .005
FRACTIONS: ± 1/64
ANGLES: ± 0 30'

THE CONTENTS OF THIS DRAWING ARE THE EXCLUSIVE PROPERTY OF THE TECHNICAL MATERIEL CORP. ITS UNAUTHORIZED USE OR REPRODUCTION IN WHOLE OR IN PART IS STRICTLY FORBIDDEN.

NOTES

TMC FORM 109

REVISIONS						
SYM	DESCRIPTION	DATE	E.M.N. NO.	DRAFT	CHKD	APPD

CK-624

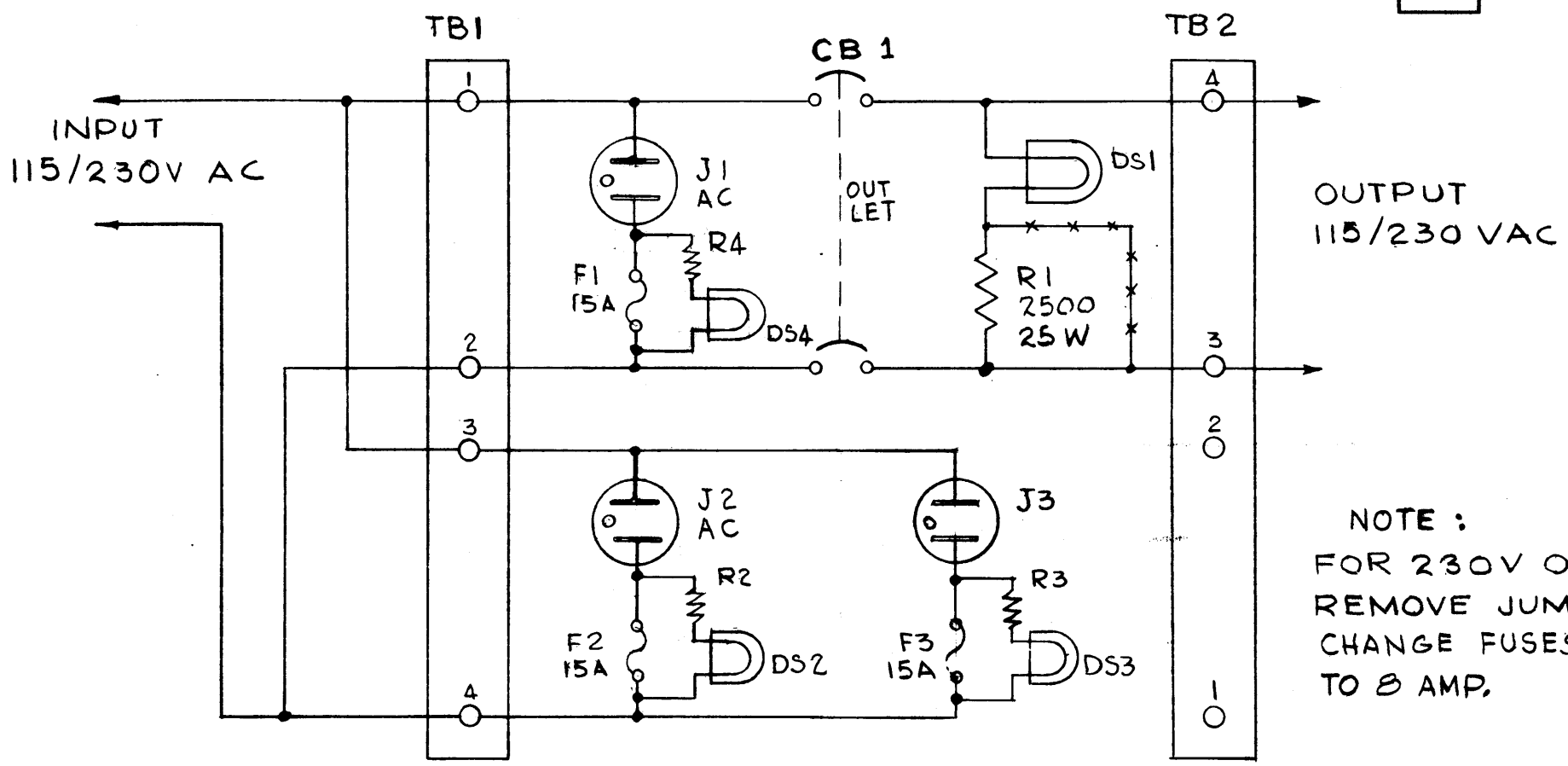

NOTE :
FOR 230V OPERATION,
REMOVE JUMPER MARKED -x-x-x-
CHANGE FUSES F1, F2 & F3 FROM 15 AMP
TO 8 AMP.

REQ'D.	ITEM	PART NUMBER	DESCRIPTION	SYMBOL
STRUMER			LIST OF MATERIAL	

MATERIAL

FINISH

THE TECHNICAL MATERIEL CORP.
MAMARONECK, NEW YORK

TITLE
SCHEMATIC DIAGRAM
DCP-2

1	DCP-2	
Q'T'Y./UNIT	MODEL USED ON	ASS'Y. NO.

SCALE | CODE

UNLESS OTHERWISE SPECIFIED
DIMENSIONS ARE IN INCHES AND INCLUDE
CHEMICALLY APPLIED OR PLATED FINISHES

		DATE
DRAWN	T. RAMIREZ	2-11-63
CHECKED		3-18-63
ELECT. DES.		3-18-63
MECH. DES.		3-18-63

FINAL APPROVAL | DATE

CK-624

SHEET | REV. LTR.

DECIMALS: .X ± .05, .XX ± .01, .XXX ± .005
TOLERANCES
FRACTIONS: ± 1/64
ANGLES: ± 0° 30'

NOTES

THE CONTENTS OF THIS DRAWING ARE THE EXCLUSIVE PROPERTY OF THE TECHNICAL MATERIEL CORP. ITS UNAUTHORIZED USE OR REPRODUCTION IN WHOLE OR IN PART IS STRICTLY FORBIDDEN.

TMC FORM 109

THE CONTENTS OF THIS DRAWIN ARE THE EXCLUSIVE PROPERTY OF THE TECHNICAL MATERIEL CORP. ITS UNAUTHORIZED USE OR REPRODUCTION IN WHOLE R IN PART IS STRICTLY FORBIDDEN.

CK-628

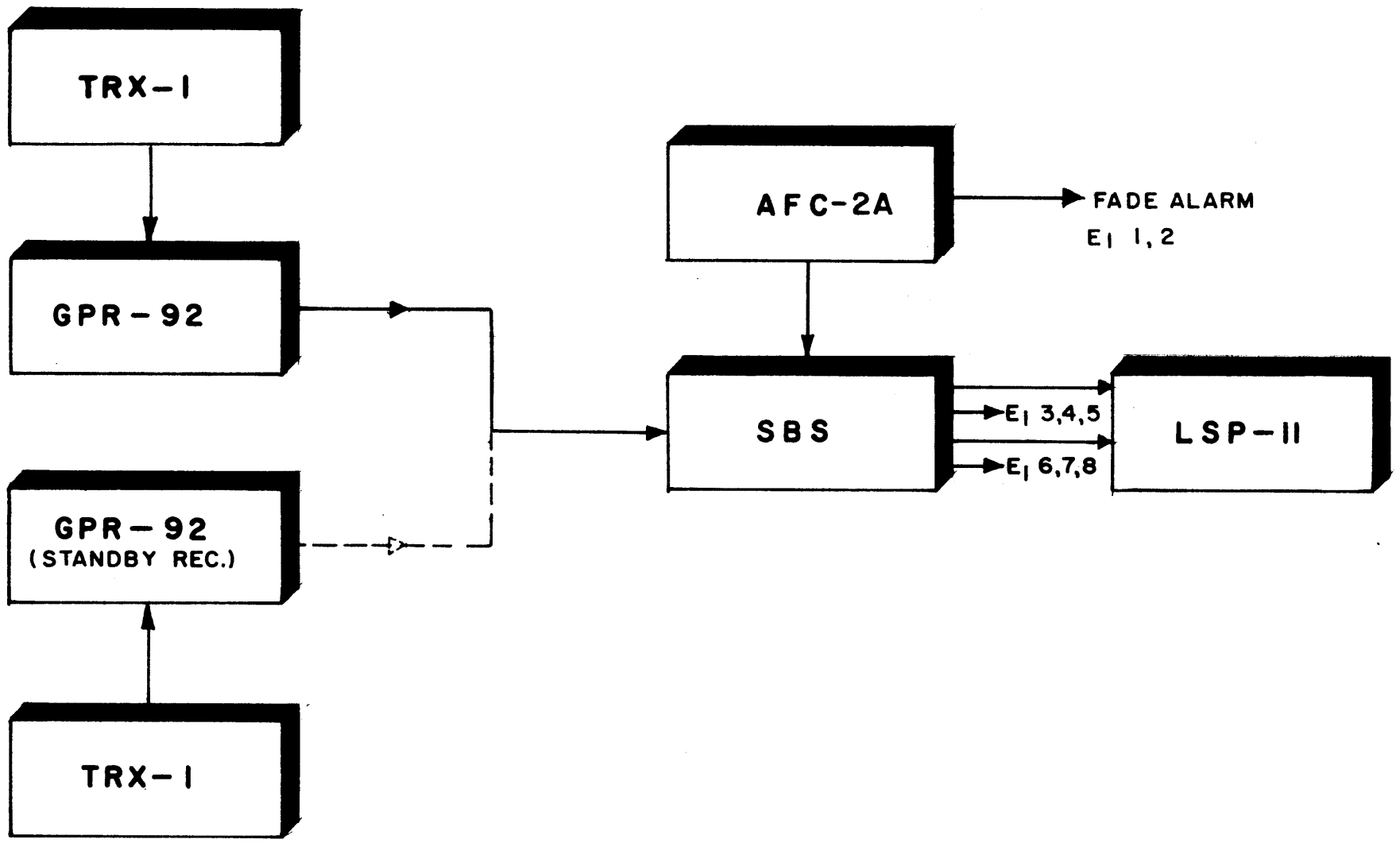

SYM	DESCRIPTION	DATE	CH. NO.	DRAFTS	CHECKER	ENG. APP.

UNLESS OTHERWISE SPECIFIED:
DIMENSIONS ARE IN INCHES
TOLERANCES ON
FRACTIONS ± 1/64 DECIMALS ± .005 ANGLES ± 1/2°

SCALE:

MAXIMUM ALLOWABLE TOLERANCES HAVE BEEN DETERMINED AND ANY DEVIATIONS WILL BE CAUSE FOR REJECTION.
REMOVE ALL BURRS AND SHARP EDGES

REQ. PER UNIT	MODEL	SECTION	ASS'Y. NO.	DATE
	DDR-7A			3-5-63
USED ON				

REQ.	ITEM	PART NO.	STRUMER DESCRIPTION	SYMBOL
STOCK SIZE			THE TECHNICAL MATERIEL CORP. MAMARONECK, NEW YORK	
MATERIAL			BLOCK DIAGRAM DDR-7A	
TYPE & TEMPER	HEAT TREAT. SPEC.		C.D.L / JQ 3/14/63 / BP	
FINISH & SPEC. NO.			DRAWN / CHECKED / FINAL APPROVAL	
			ELEC. DES. APP. / MECH. DES. APP. / CK-628	

TMC FORM NO. 109

DEFIANCE NO. 1020 36649

CK-637 | 0

REVISIONS

SYM	DESCRIPTION	DATE	E.M.N. NO.	DRAFT	CHKD	APPD
0	ORIGINAL RELEASE FOR PRODUCTION	3-2-64		A.M.		

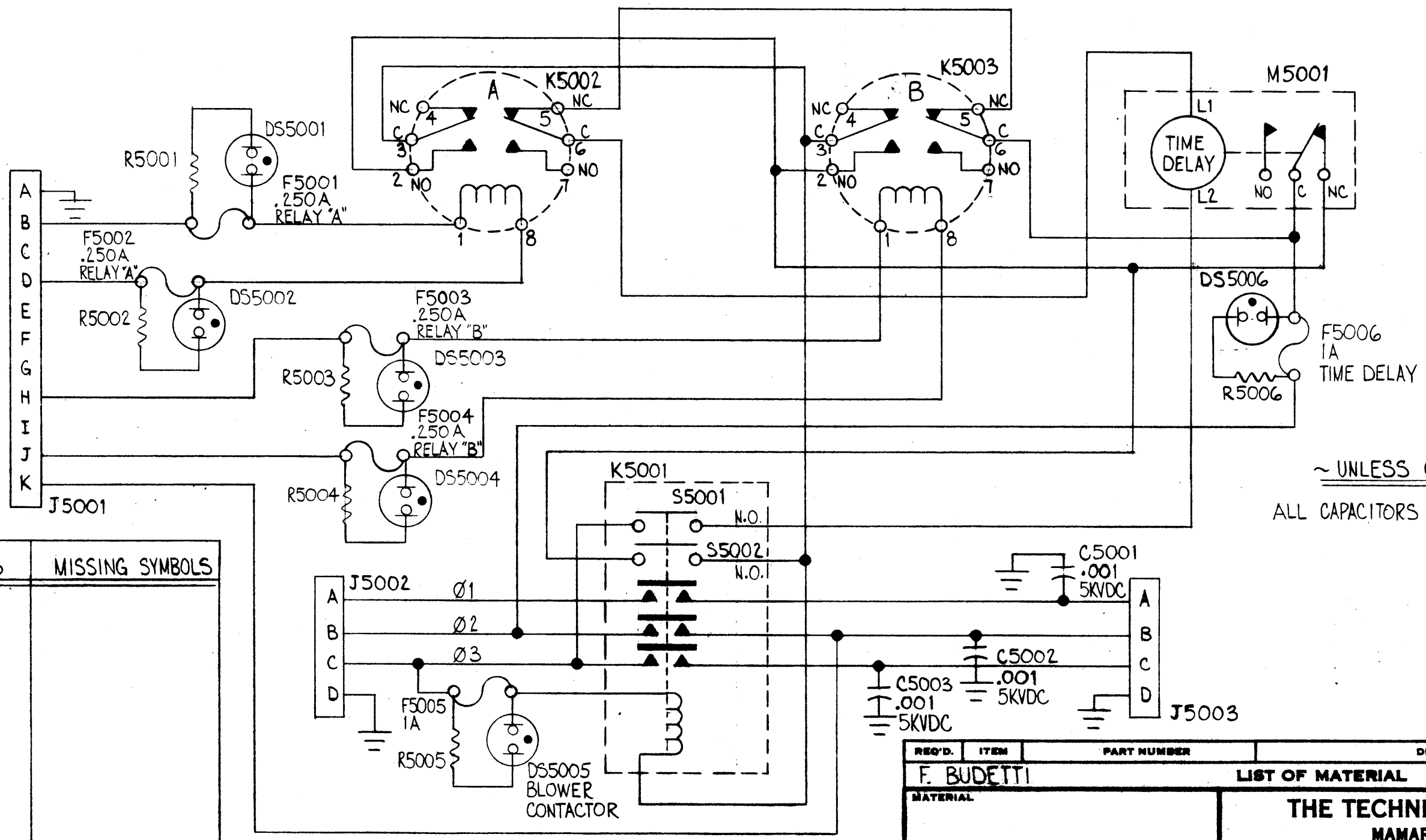

~ UNLESS OTHERWISE SPECIFIED ~

ALL CAPACITORS ARE IN MICROFARADS.

LAST SYMBOLS	MISSING SYMBOLS
C5003	
DS5006	
F5006	
J5003	
K5003	
S5002	
M5001	
R5006	

NOTES

	GPT-200K	AX-393
Q'TY./UNIT	MODEL USED ON	ASS'Y. NO.

SCALE | CODE A

THE CONTENTS OF THIS DRAWING ARE THE EXCLUSIVE PROPERTY OF THE TECHNICAL MATERIEL CORP. ITS UNAUTHORIZED USE OR REPRODUCTION IN WHOLE OR IN PART IS STRICTLY FORBIDDEN.

REQ'D.	ITEM	PART NUMBER	DESCRIPTION	SYMBOL

F. BUDETTI

LIST OF MATERIAL

MATERIAL

FINISH

UNLESS OTHERWISE SPECIFIED
DIMENSIONS ARE IN INCHES AND INCLUDE CHEMICALLY APPLIED OR PLATED FINISHES

DECIMALS .X ± .05 .XX ± .01 .XXX ± .005 — TOLERANCES — FRACTIONS ± 1/64 ANGLES ± 0° 30'

THE TECHNICAL MATERIEL CORP.
MAMARONECK, NEW YORK

TITLE: SCHEMATIC DIAGRAM, BLOWER DELAY

		DATE		DATE
DRAWN	W.A. FRANCO	3-18-63	FINAL APPROVAL	
CHECKED	W.F.	2-13-64		
ELECT. DES.		2/14/64	CK-637	0
MECH. DES.	SD	2-13-64	SHEET	REV. LTR.

TMC FORM 106

REVISIONS						
SYM	DESCRIPTION	DATE	E.M.N. NO.	DRAFT	CHKD	APPD
0	ORIGINAL RELEASE FOR PRODUCTION	4-23-64	0	A.M.		
A	COMPLETELY REVISED	11-30-65	15254	H.V.V.		
B	W101 & NOTE ADDED, P3052 DELETED	12-2-67	18423			FR

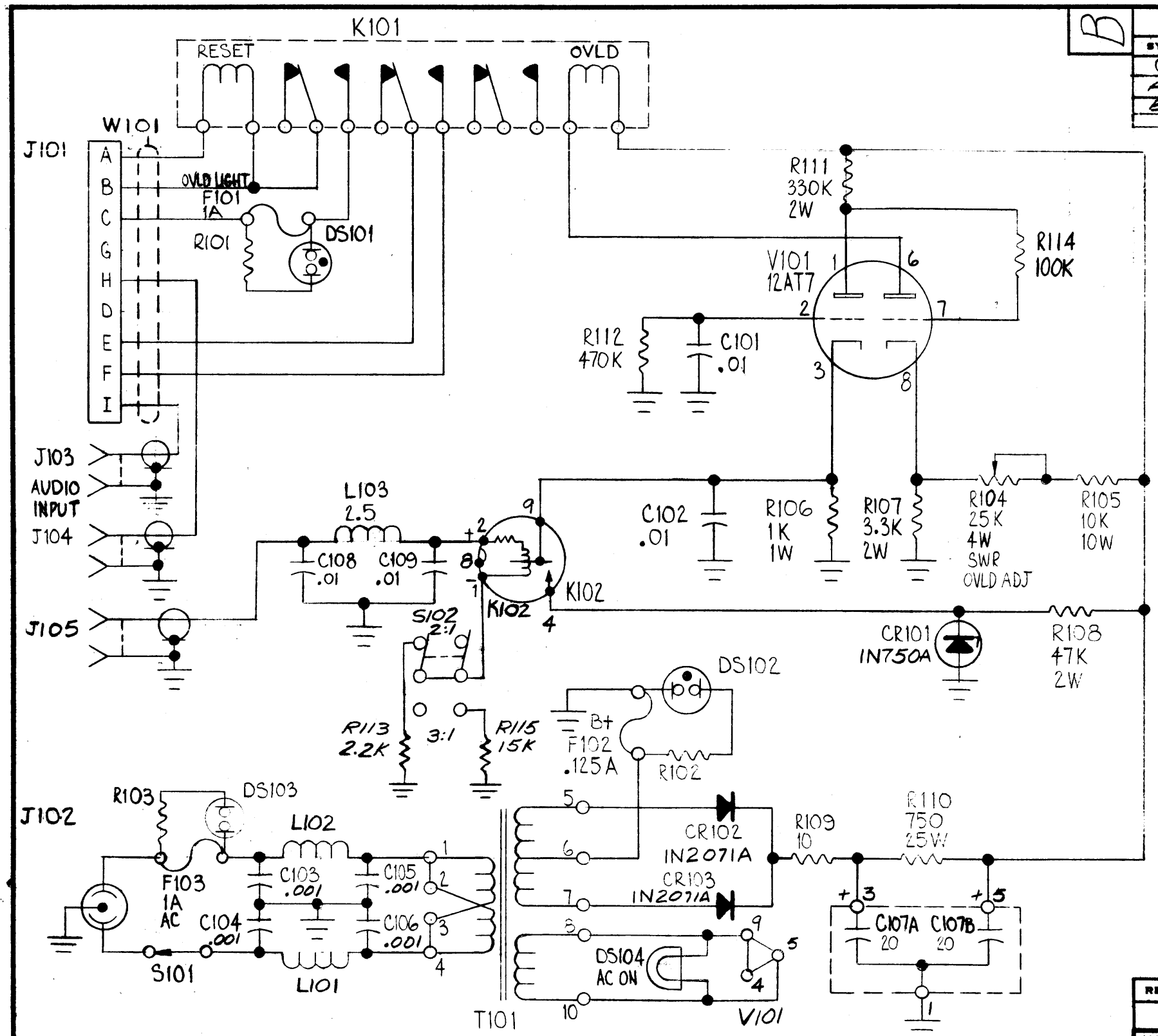

~LAST SYMBOLS~

C109
CR103
DS104
F103
J105
K102
L103
R115
T101
V101
S102
* W103

~MISSING SYMBOLS~

*~NOTE~

W102 & W103 ARE NOT SHOWN ON THIS SCHEMATIC BUT ARE SUPPLIED AS LOOSE ITEMS WHEN THIS UNIT IS SHIPPED BY ITSELF. WHEN SHIPPED WITH A SYSTEM W102 IS PART OF RACK AND W103 IS SHIPPED AS A LOOSE ITEM.
SEE MATERIAL LIST FOR CORRECT PART/No.

Q'TY./UNIT	MODEL USED ON	ASS'Y. NO.
	GPT-40K()4	SWCU-1
1	GPT-10K()7	SWCU-1

SCALE — CODE A

NOTES

THE CONTENTS OF THIS DRAWING ARE THE EXCLUSIVE PROPERTY OF THE TECHNICAL MATERIEL CORP. ITS UNAUTHORIZED USE OR REPRODUCTION IN WHOLE OR IN PART IS STRICTLY FORBIDDEN.

RED'D.	ITEM	PART NUMBER	DESCRIPTION	SYMBOL

F. BUDETTI — LIST OF MATERIAL

MATERIAL

FINISH

UNLESS OTHERWISE SPECIFIED DIMENSIONS ARE IN INCHES AND INCLUDE CHEMICALLY APPLIED OR PLATED FINISHES

TOLERANCES: DECIMALS .X ± .05, .XX ± .01, .XXX ± .005; FRACTIONS ± 1/64; ANGLES ± 0° 30'

THE TECHNICAL MATERIEL CORP.
MAMARONECK, NEW YORK

TITLE: SCHEMATIC, DIAGRAM

DRAWN W.A. FRANCO	DATE 10-14-63	FINAL APPROVAL	DATE 5-4-64
CHECKED	DATE		
ELECTRICAL	DATE 7/21/68	CK-642	B
MECHANICAL	DATE	SHEET	REV. LTR.

TM FORM 109 — STOCK NO. 440H

THE CONTENTS OF THIS DRAWING ARE THE EXCLUSIVE PROPERTY OF THE TECHNICAL MATERIEL CORP. ITS UNAUTHORIZED USE OR REPRODUCTION IN WHOLE OR IN PART IS STRICTLY FORBIDDEN.

CK-653

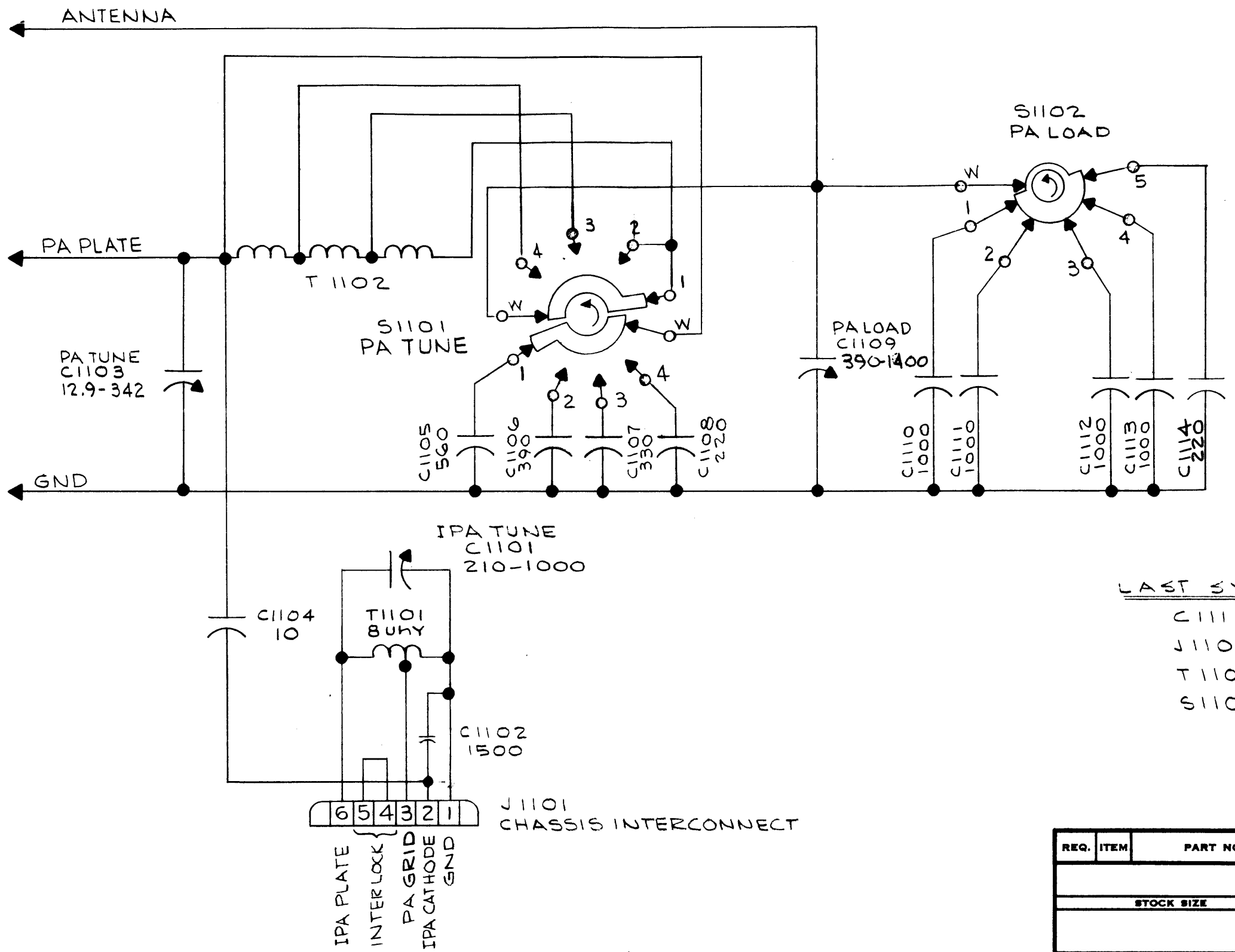

PA TUNE	
SWITCH POS.	FREQUENCY
1	2 - 2.2
2	2.2 - 2.5 MC
3	2.5 - 3.1 MC
4	3.1 - 4 MC

NOTE:
ALL CAPACITORS IN PF

LAST SYMBOLS
C1114
J1101
T1102
S1102

SYM	DESCRIPTION	DATE	CH. NO.	DRAFTS	CHECKER	ENG. APP.

UNLESS OTHERWISE SPECIFIED:
DIMENSIONS ARE IN INCHES
TOLERANCES ON
FRACTIONS ± 1/64 DECIMALS ± .005 ANGLES ± 1/2°

SCALE: NONE
A

MAXIMUM ALLOWABLE TOLERANCES HAVE BEEN DETERMINED AND ANY DEVIATIONS WILL BE CAUSE FOR REJECTION. REMOVE ALL BURRS AND SHARP EDGES

REQ. PER UNIT	MODEL	SECTION	ASS'Y. NO.	DATE
1	TTR-10		AX-409	6-4-63

USED ON

REQ.	ITEM	PART NO.	KOHN	DESCRIPTION E 3037-67	SYMBOL
		STOCK SIZE	THE TECHNICAL MATERIEL CORP. MAMARONECK, NEW YORK		
			DIAGRAM, SCHEMATIC		
		MATERIAL	AX-409/TTRA-1		
		TYPE & TEMPER / HEAT TREAT. SPEC.	DRAWN	CHECKED 6/17/63	FINAL APPROVAL
		FINISH & SPEC. NO.	RON KOHN 6/26/63 ELEC. DES. APP.	MECH. DES. APP.	CK-653

TMC FORM NO. 109

DEFIANCE NO. 1 20 52049

THE CONTENTS OF THIS DRAWING ARE THE EXCLUSIVE PROPERTY OF THE TECHNICAL MATERIEL CORP. ITS UNAUTHORIZED USE OR REPRODUCTION IN WHOLE OR IN PART IS STRICTLY FORBIDDEN.

CK-654

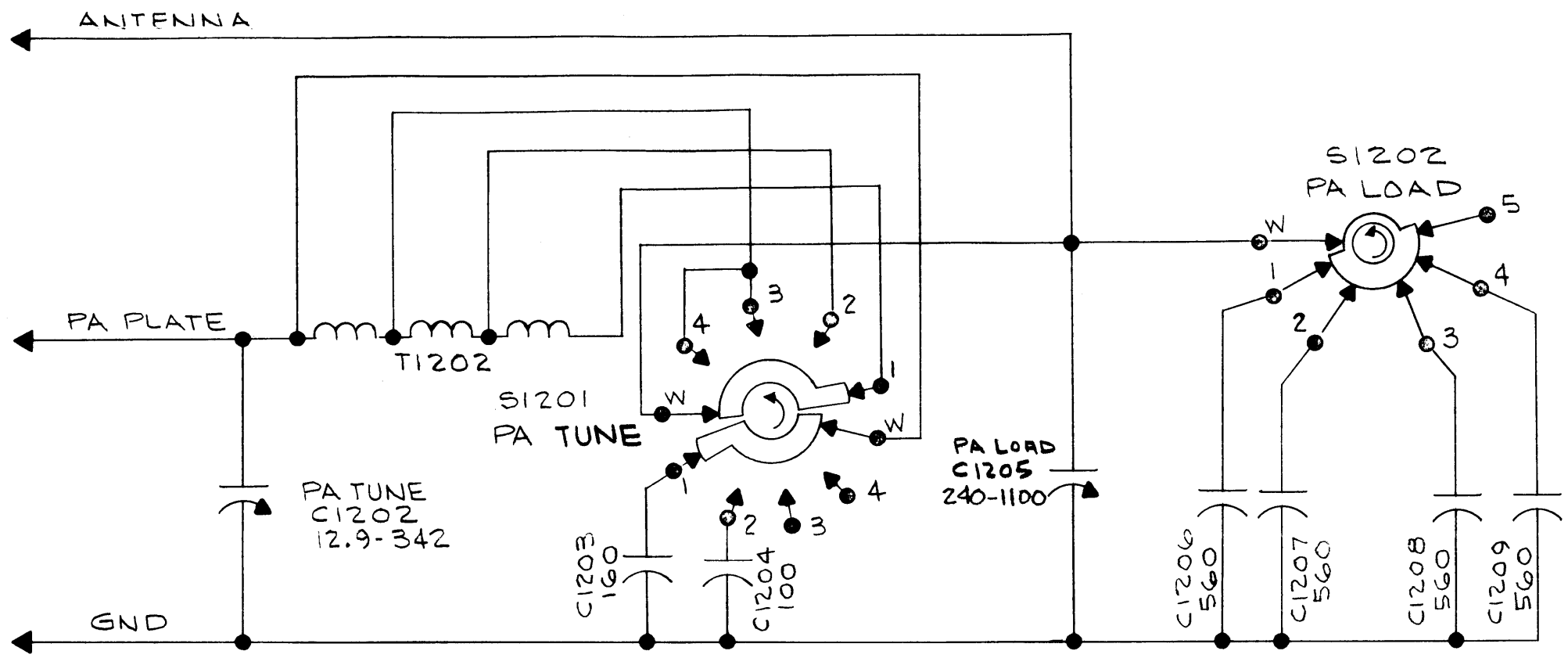

PA TUNE	
SWITCH POS	FREQUENCY
1	4-5 MC
2	5-6.3 MC
3 & 4	6.3-8 MC

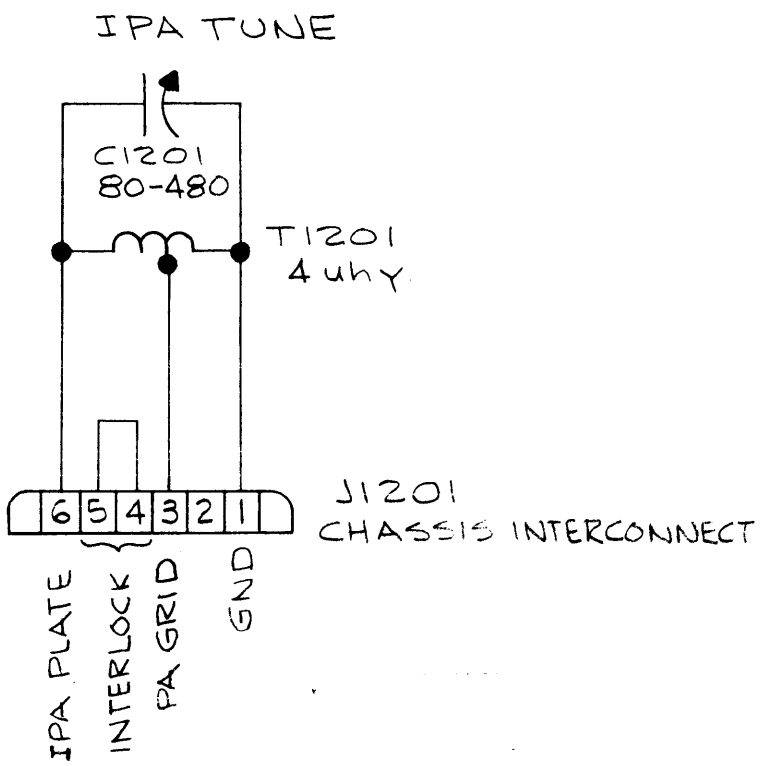

NOTE:
ALL CAPACITORS IN PF

LAST SYMBOLS
C1209
T1202
J1201
S1202

REQ.	ITEM	PART NO.	KOHN	DESCRIPTION E3037-68	SYMBOL
		STOCK SIZE	THE TECHNICAL MATERIEL CORP. MAMARONECK, NEW YORK		
		MATERIAL	DIAGRAM, SCHEMATIC		
			AX-410/TTRA-2		
		TYPE & TEMPER / HEAT TREAT. SPEC.	DRAWN	CHECKED	FINAL APPROVAL
		FINISH & SPEC. NO.	RON KOHN 6/26/63	—	CK-654
			ELEC. DES. APP.	MECH. DES. APP.	

SYM	DESCRIPTION	DATE	CH. NO.	DRAFTS	CHECKER	ENG. APP.

UNLESS OTHERWISE SPECIFIED:
DIMENSIONS ARE IN INCHES
TOLERANCES ON
FRACTIONS ± 1/64 DECIMALS ± .005 ANGLES ± 1/2°

SCALE: NONE A

MAXIMUM ALLOWABLE TOLERANCES HAVE BEEN DETERMINED AND ANY DEVIATIONS WILL BE CAUSE FOR REJECTION. REMOVE ALL BURRS AND SHARP EDGES

REQ. PER UNIT	MODEL	SECTION	ASS'Y. NO.	DATE
1	TTR-10		AX-410	6-5-63

USED ON

TMC FORM NO. 1 9

DEFIANCE NO. 1 20 36645

THE CONTENTS OF THIS DRAWING ARE THE EXCLUSIVE PROPERTY OF THE TECHNICAL MATERIEL CORP. ITS UNAUTHORIZED USE OR REPRODUCTION IN WHOLE OR IN PART IS STRICTLY FORBIDDEN.

CK-655 B

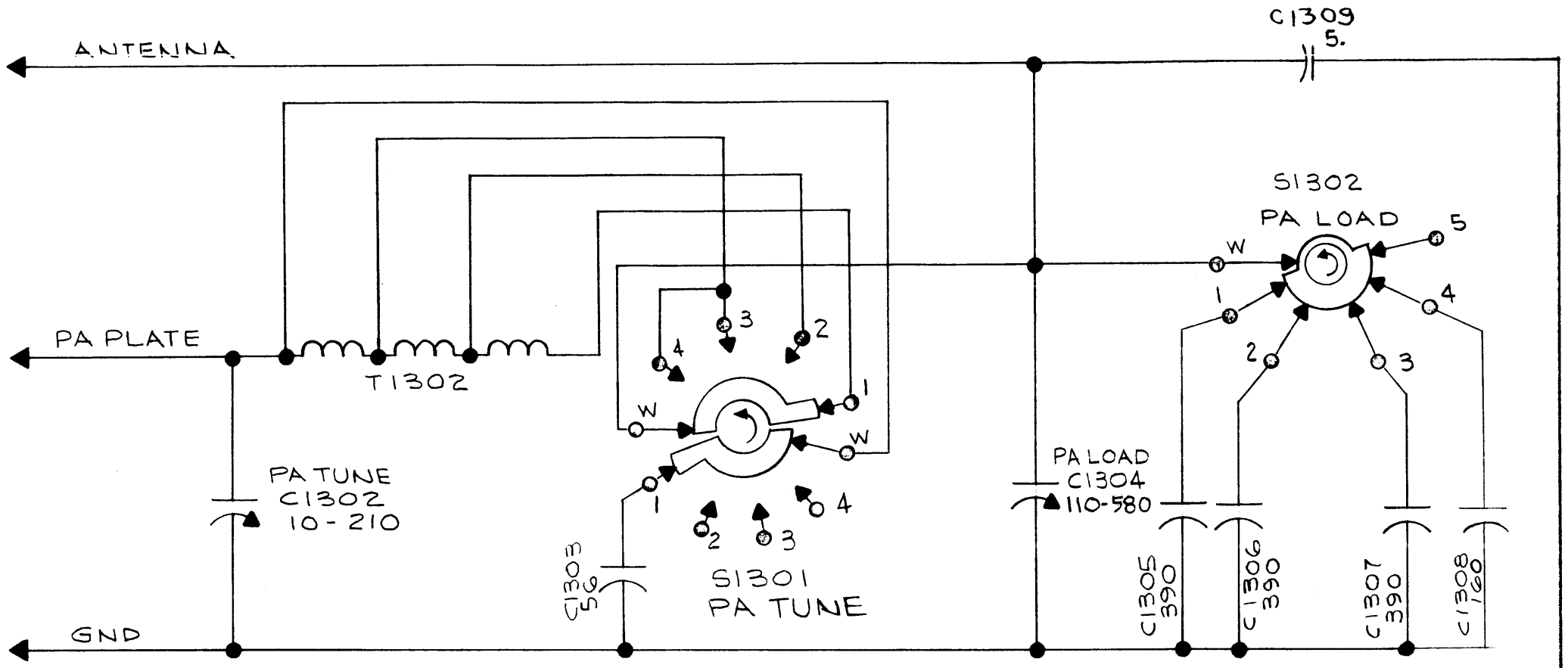

PA TUNE	
SWITCH POS.	FREQUENCY
1	8-10 MC
2	10-12.6 MC
3 & 4	12.6-16 MC

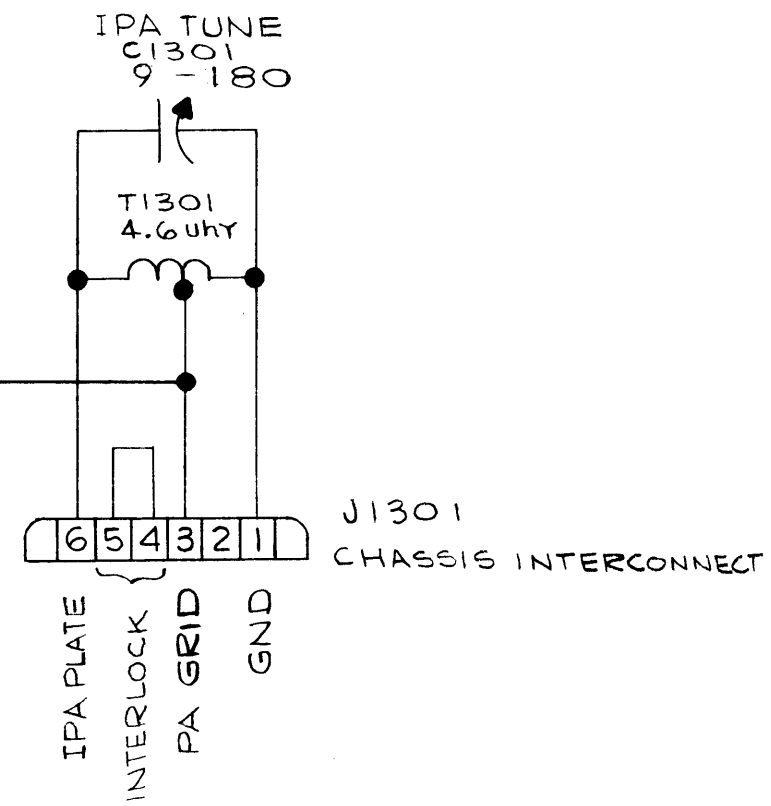

NOTE:
ALL CAPACITORS IN PF

LAST SYMBOLS
C1309
T1302
J1301
S1302

SYM	DESCRIPTION	DATE	CH. NO.	DRAFTS	CHECKER	ENG. APP.
B	C1303 VALUE WAS "560"	1.5.65	13184	R.R.	[illegible]	[illegible]
A	C1309 ADD. BETWEEN PA GRID & ANTENNA LAST SYMB. C1309 WAS C1308	9.15.64	12357	[illegible]	[illegible]	[illegible]

UNLESS OTHERWISE SPECIFIED:
DIMENSIONS ARE IN INCHES
TOLERANCES ON
FRACTIONS ± 1/64 DECIMALS ± .005 ANGLES ± 1/2°

SCALE: NONE A

MAXIMUM ALLOWABLE TOLERANCES HAVE BEEN DETERMINED AND ANY DEVIATIONS WILL BE CAUSE FOR REJECTION. REMOVE ALL BURRS AND SHARP EDGES

REQ. PER UNIT	MODEL	SECTION	ASS'Y. NO.	DATE
1	TTR-10		AX-411	6-4-63

USED ON

REQ.	ITEM	PART NO.	KOHN DESCRIPTION E3037-69	SYMBOL
		STOCK SIZE	THE TECHNICAL MATERIEL CORP. MAMARONECK, NEW YORK	
		MATERIAL	DIAGRAM, SCHEMATIC AX-411/TTRA-3	
		TYPE & TEMPER / HEAT TREAT. SPEC.	DRAWN / CHECKED / FINAL APPROVAL	
		FINISH & SPEC. NO.	Ron Kohn 6/26/63 / — / CK-655	B
			ELEC. DES. APP. / MECH. DES. APP.	

TMC FORM NO. 1 9

DEFIANCE NO. 1 20 36548

THE CONTENTS OF THIS DRAWIN ARE THE EXCLUSIVE PROPERTY OF THE TECHNICAL MATERIEL CORP. ITS UNAUTHORIZED USE OR REPRODUCTI N IN WHOLE OR IN PART IS STRICTLY FORBIDDEN.

CK-656 A

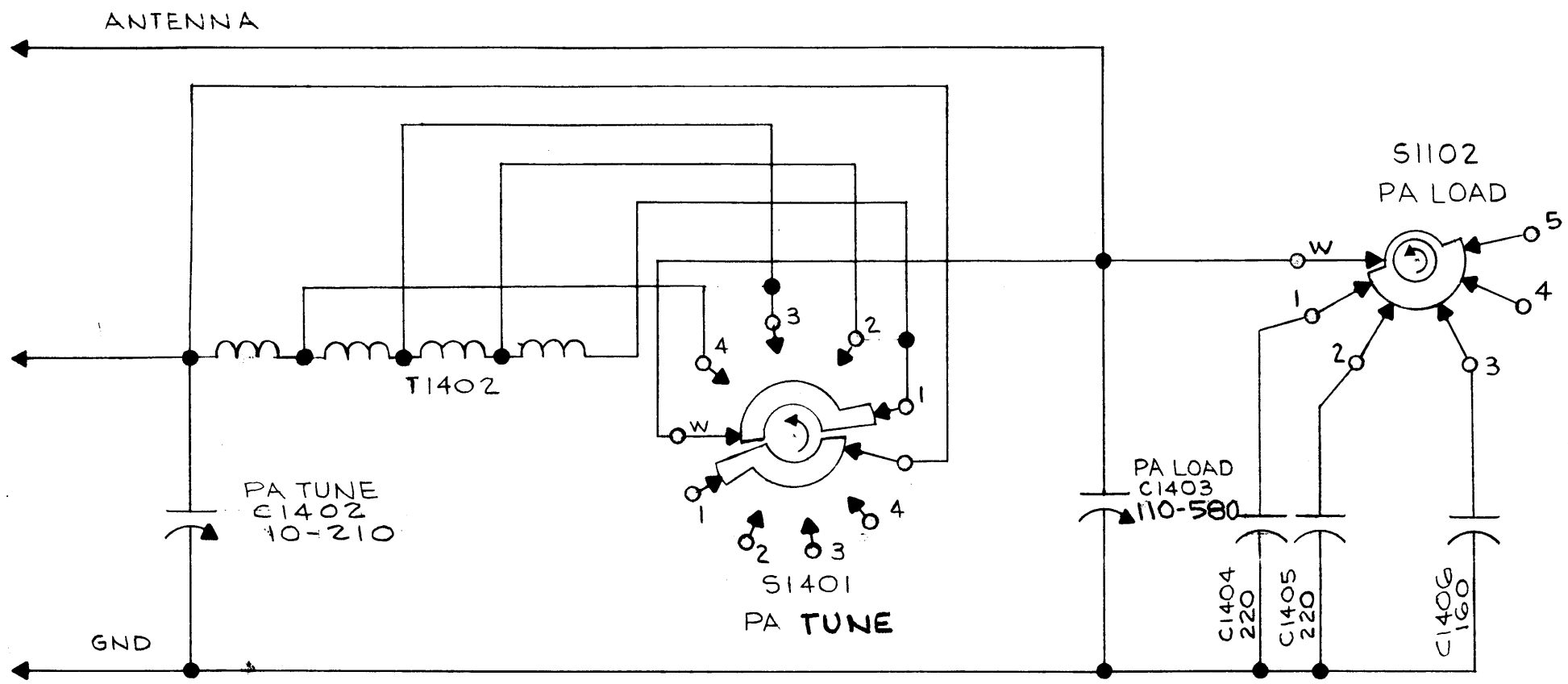

PA TUNE	
SWITCH POS	FREQUENCY
1	16-20 MC
2	20-24 MC
3	24-28 MC
4	28-32 MC

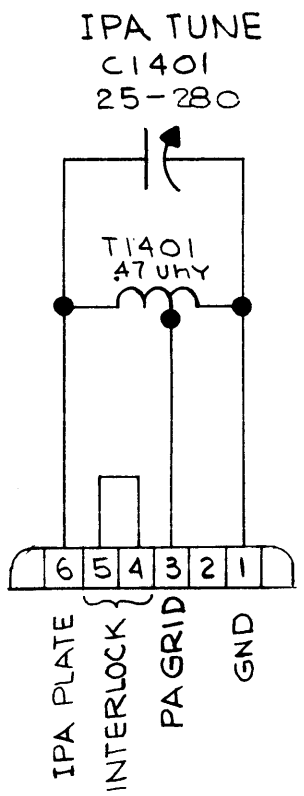

J1401
CHASSIS INTERCONNECT

NOTE:
ALL CAPACITORS IN PF

LAST SYMBOLS
C1406
T1402
J1401
S1402

SYM	DESCRIPTION	DATE	CH. NO.	DRAFTS	CHECKER	ENG. APP.
A	IPA TUNE CAP. C1401 WAS C1404	5-26-64	1146 3	A.M.	@	

UNLESS OTHERWISE SPECIFIED:
DIMENSIONS ARE IN INCHES
TOLERANCES ON
FRACTIONS ± 1/64 DECIMALS ± .005 ANGLES ± 1/2°

SCALE: NONE A

MAXIMUM ALLOWABLE TOLERANCES HAVE BEEN DETERMINED AND ANY DEVIATIONS WILL BE CAUSE FOR REJECTION. REMOVE ALL BURRS AND SHARP EDGES

REQ. PER UNIT	MODEL	SECTION	ASS'Y. NO.	DATE
1	TTR-10		AX-412	6-4-63

USED ON

REQ.	ITEM	PART NO.	KOHN DESCRIPTION E3037-70	SYMBOL

STOCK SIZE

MATERIAL

TYPE & TEMPER | HEAT TREAT. SPEC.

FINISH & SPEC. NO.

THE TECHNICAL MATERIEL CORP.
MAMARONECK, NEW YORK

DIAGRAM, SCHEMATIC
AX-412 / TTRA-4

DRAWN	CHECKED	FINAL APPROVAL
Ron Kohn 6/26/63	—	CK-656 A

ELEC. DES. APP. | MECH. DES. APP.

TMC FORM NO. 1

DEFIANCE N . 1 20 36649

THE CONTENT OF THIS DRAWING ARE THE EXCLUSIVE PROPERTY OF THE TECHNICAL MATERIEL CORP. ITS UNAUTHORIZED U E OR REPRODUCTION IN WHOLE OR IN PART IS STRICTLY FORBIDDEN.

CK 671 A

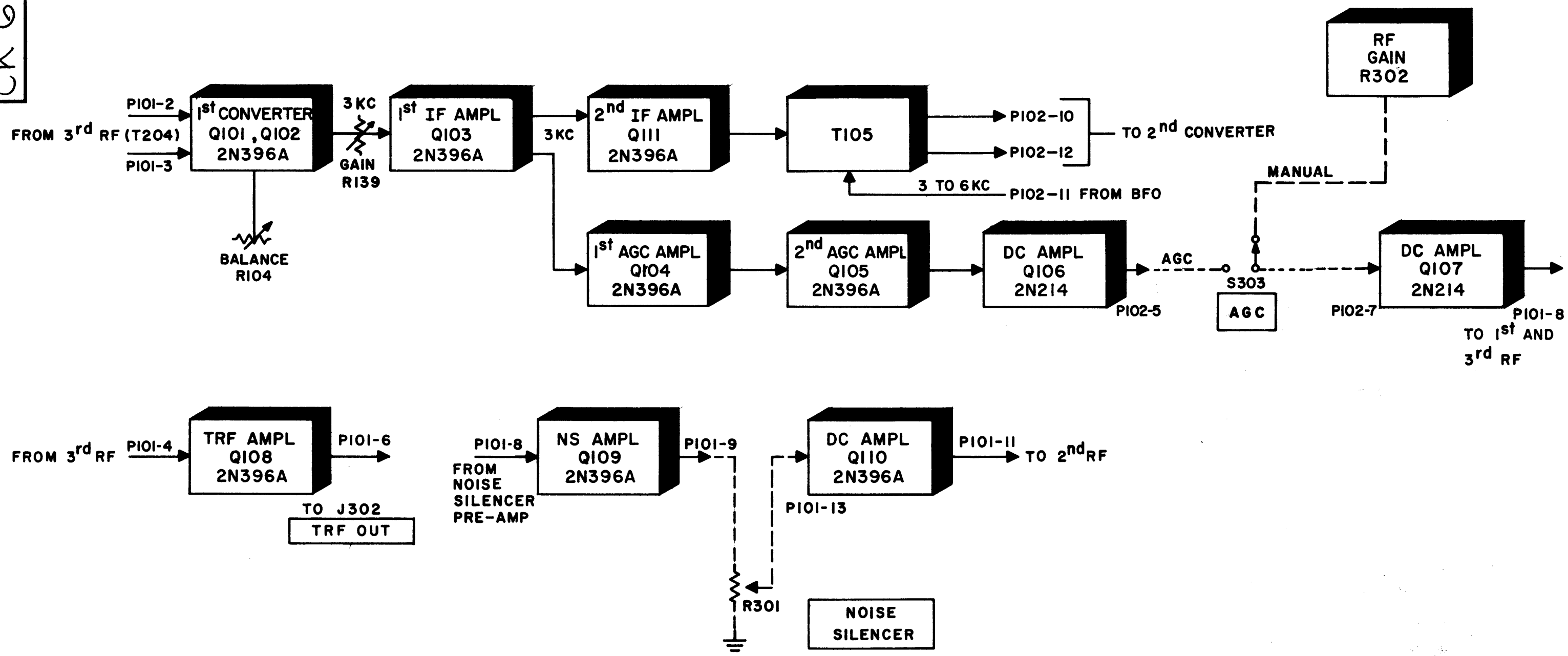

NOTE:

1- 2N396A BETA TO BE 85-105 AS PER TX101-1

REF: CK 678

REQ.	ITEM	PART NO.	M. GELLMAN DESCRIPTION	SYMBOL
STOCK SIZE			THE TECHNICAL MATERIEL CORP. MAMARONECK, NEW YORK	
MATERIAL			DIAGRAM, BLOCK (IF MODULE)	
TYPE & TEMPER	HEAT TREAT. SPEC.		DRAWN / CHECKED / FINAL APPROVAL	
FINISH & SPEC. NO.			ELEC. DES. APP. / MECH. DES. APP.	CK 671 A

SYM	DESCRIPTION	DATE	CH. NO.	DRAFTS	CHECKER	ENG. APP.
A	NOTE #1 ADDED	8.26.64	12096	NB		
0	ORIGINAL RELEASE FOR PRODUCTION	5-11-64	0	A.M.		

UNLESS OTHERWISE SPECIFIED:
DIMENSIONS ARE IN INCHES
TOLERANCES ON
FRACTIONS ± 1/64 DECIMALS ± .005 ANGLES ± 1/2

SCALE:

MAXIMUM ALLOWABLE TOLERANCES HAVE BEEN DETERMINED AND ANY DEVIATIONS WILL BE CAUSE FOR REJECTION. REMOVE ALL BURRS AND SHARP EDGES

REQ. PER UNIT	MODEL	SECTION	ASS'Y. NO.	DATE
1	VLR-1		AX-425	6-17-63

USED ON

REVISIONS						
SYM	DESCRIPTION	DATE	E.M.N. NO.	DRAFT	CHKD	APPD
Ø	ORIGINAL RELEASE FOR PRODUCTION	6/1/64	0	A.M	@	MK

CK-687 Ø

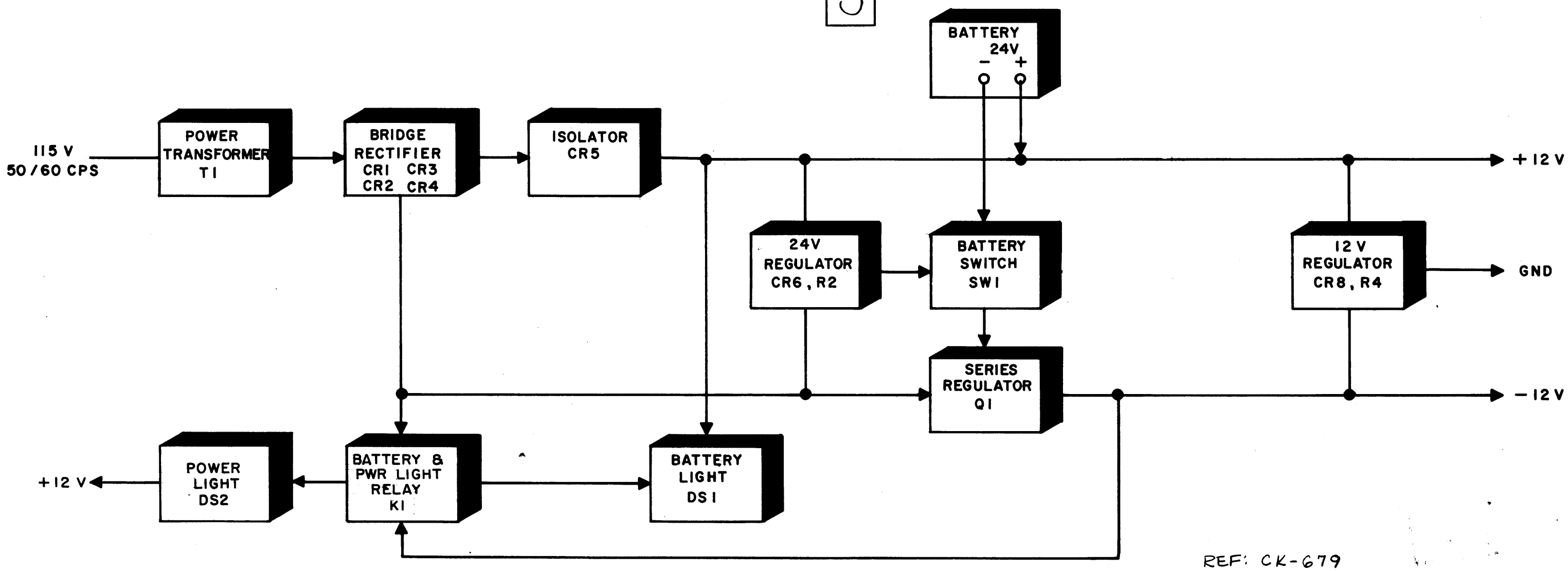

REF: CK-679

REQ'D.	ITEM	PART NUMBER	M. GELLMAN DESCRIPTION	SYMBOL

LIST OF MATERIAL

Q'TY./UNIT	MODEL USED ON	ASS'Y. NO.
1	LFS-1	
1	VLR-1	

SCALE —//— CODE A

NOTES

THE CONTENTS OF THIS DRAWING ARE THE EXCLUSIVE PROPERTY OF THE TECHNICAL MATERIEL CORP. ITS UNAUTHORIZED USE OR REPRODUCTION IN WHOLE OR IN PART IS STRICTLY FORBIDDEN.

MATERIAL —//—

FINISH —//—

UNLESS OTHERWISE SPECIFIED DIMENSIONS ARE IN INCHES AND INCLUDE CHEMICALLY APPLIED OR PLATED FINISHES

TOLERANCES: DECIMALS .X ± .05, .XX ± .01, .XXX ± .005; FRACTIONS ± 1/64; ANGLES ± 0° 30′

THE TECHNICAL MATERIEL CORP.
MAMARONECK, NEW YORK

TITLE: DIAGRAM, BLOCK (POWER SUPPLY)

DRAWN J. LESHINSKI	DATE 7/30/63	FINAL APPROVAL	DATE
CHECKED @	DATE 5-7-64		
ELECT. DES.	DATE	CK-687	Ø
MECH. DES.	DATE	SHEET	REV. LTR.

TMC FORM 109