IF IT IS FOUND DESIRABLE TO CHANGE ANY TOLERANCE OR OTHER DETAIL SPECIFIED ON THIS DRAWING NOTIFY THE PURCHASER PROMPTLY.

MAXIMUM ALLOWABLE TOLERANCES HAVE BEEN DETERMINED AND DEVIATIONS WILL BE CAUSE FOR REJECTION. REMOVE ALL BURRS AND SHARP EDGES

B

CA-196

NOTE:
MOUNT ITEM #4 OVER ALL CONTACT PINS.

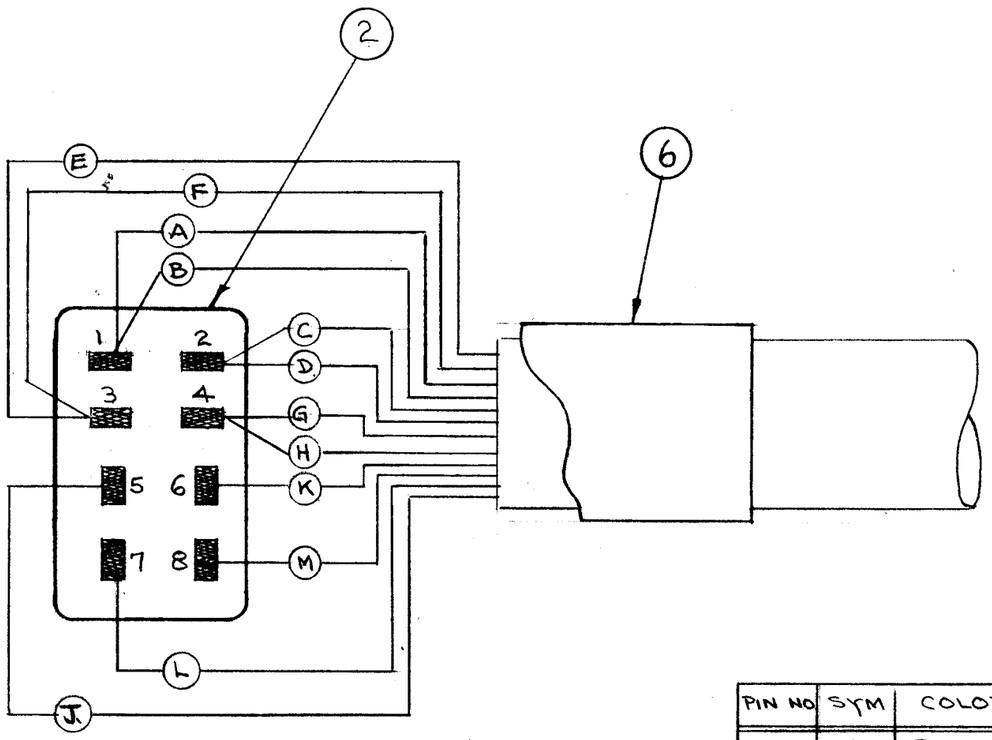

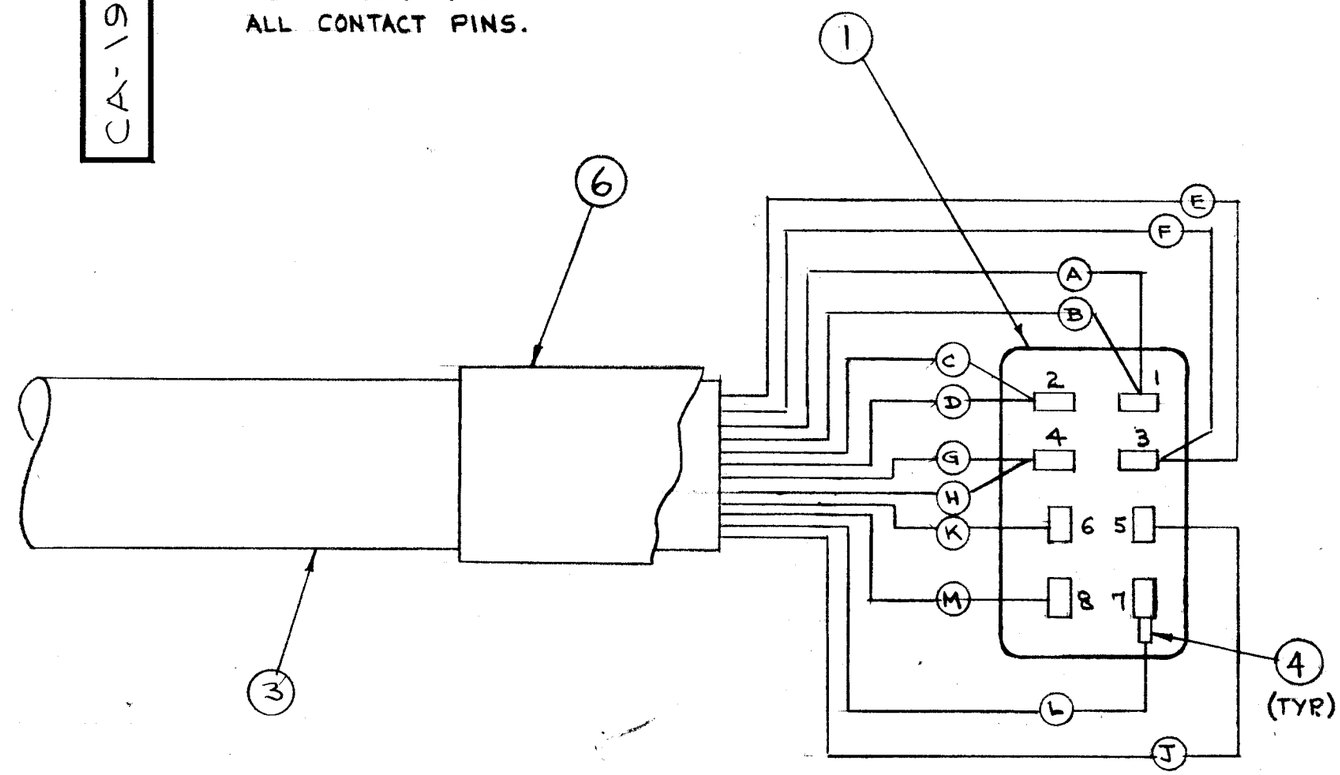

CA-196 - XX

CABLE NO. — LENGTH IN INCHES (PLUG TO PLUG)

PIN NO	SYM	COLOR
1	A	BLACK
1	B	WHITE
2	C	LT. BROWN
2	D	PINK
3	E	RED
3	F	GREEN
4	G	YELLOW
4	H	DK. BROWN
5	J	VIOLET
6	K	GRAY
7	L	BLUE
8	M	ORANGE

NOTICE TO PERSONS RECEIVING THIS DRAWING

THE TECHNICAL MATERIEL CORPORATION claims proprietary right in the material disclosed hereon. This drawing is issued in confidence for engineering information only and may not be reproduced or used to manufacture anything shown hereon without permission from THE TECHNICAL MATERIEL CORPORATION to the user. This drawing is loaned for mutual assistance and is subject to recall at any time.

Property of:
THE TECHNICAL MATERIEL CORPORATION
MAMARONECK, NEW YORK

REQ.	ITEM	PART NO.	DESCRIPTION	SYMBOL
2	6	MS-3420-6A	BUSHING, CABLE	
X	5	BS-100	SOLDER, SOFT (ALL CONNECTIONS)	
X	4	PX-100-1-118	INSULATION	
X	3	WI-100-10	CABLE, MULTI-CONDUCTOR	
1	2	PL-116-2	CONNECTOR, FEMALE	
1	1	PL-116-1	CONNECTOR, MALE	

STOCK SIZE: ||
MATERIAL: || WEIGHT PER PC.: ||
TYPE & TEMPER: ||
HEAT TREAT. SPEC.: ||
FINISH & SPEC. NO.: ||

THE TECHNICAL MATERIEL CORP.
MAMARONECK. NEW YORK

CABLE, POWER
RCR SYSTEM

C.D.D. 11/18/53

DRAWN	ELEC. DES. APP.	MECH. DES. APP.
	ARB	

CHECKED	FINAL APPROVAL
	ARB

CA-196 B

ISSUE	ITEM	CHANGED FROM	DATE	CN. NO.	DRAFTS	CHECKER	ENG. APP.
B		B/M: IT.(6) ADDED; ON PICT: ITS. 4 & 6 WITH CALLOUTS ADD; NOTE ADD.	1.8.65	13242	DJ		GD
A	1	RELETTERED-CHART Added	12/1/54	1	JAR	ebb	ARB

TOLERANCES — SCALE: ||

ALL OTHERS: DEC. DIM. ± / FRAC. DIM. ± / ANGULAR DIM. ±

DRILL, PUNCH, COMMERCIAL STOCK SIZES AND MANUFACTURERS TOLERANCES ARE NOT INCLUDED.

REQ. PER UNIT	MODEL	PROJECT NO.	ASS'Y. NO.	DATE

USED ON

FORM — 108