THE CONTENTS OF THIS DRAWING ARE THE EXCLUSIVE PROPERTY OF THE TECHNICAL MATERIEL CORP. ITS UNAUTHORIZED USE OR REPRODUCTION IN WHOLE OR IN PART IS STRICTLY FORBIDDEN.

REQ. PER UNIT	USED ON MODEL	ASS'Y. NO.	DATE	SYMBOL	FUNCTION
1	GPR-92		6-7-62	L103	2ND R.F BAND 5

AC-153 0

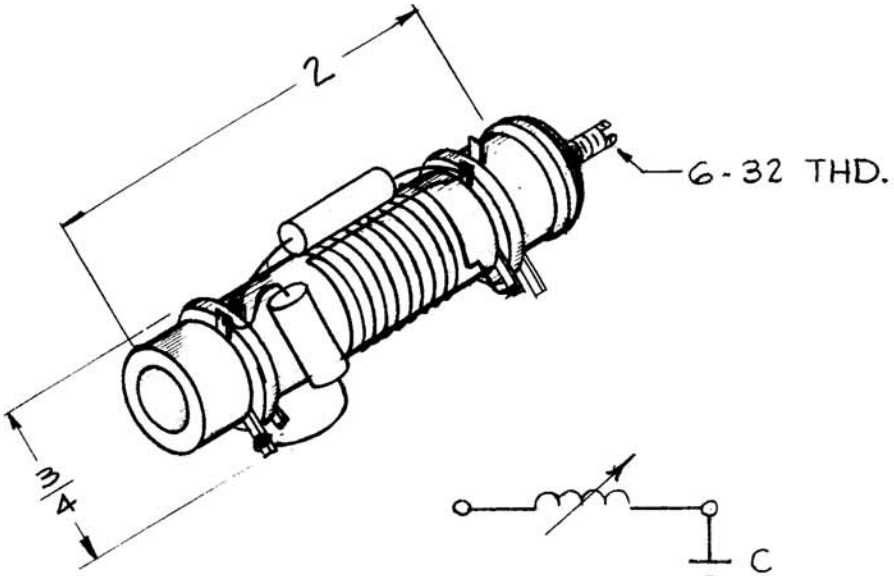

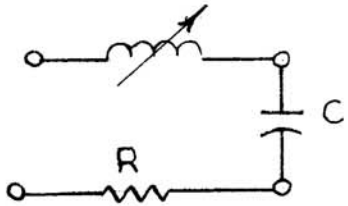

SCHEMATIC

SPECIFICATIONS
TURNS: 10 1/4
C: 5 PF
R: 22KΩ
FORM MATERIAL: STEATITE
FREQUENCY: 7.9MC

SYM	DESCRIPTION	DATE	CH. NO.	DRAFTS	CHECKER	ENG. APP.
0	ORIGINAL RELEASE FOR PRODUCTION	9·1·64	0	A.M.	@	

UNLESS OTHERWISE SPECIFIED:
DIMENSIONS ARE IN INCHES
TOLERANCES ON
FRAC. ± 1/64 DEC. ± .005 ANGLES ± 1/2°

SCALE: 2A-2468

MAXIMUM ALLOWABLE TOLERANCES HAVE BEEN DETERMINED AND ANY DEVIATIONS WILL BE CAUSE FOR REJECTION. REMOVE ALL BURRS AND SHARP EDGES

REQ.	ITEM	PART NO.	GELLMAN DESCRIPTION	SYMBOL
		STOCK SIZE	THE TECHNICAL MATERIEL CORP. MAMARONECK, NEW YORK	
		MATERIAL	COIL, R.F., TUNED ASSEMBLY	
TYPE & TEMPER	HEAT TREAT. SPEC.		DRAWN / CHECKED	FINAL APPROVAL
		FINISH & SPEC. NO.	ELEC. DES. APP. / MECH. DES. APP.	AC-153 0

TMC FORM NO. 106-A

DEFIANCE NO. 1020 36848