NO.	NOTES
1.	RECOMMENDED FUSETRON OR FUSTAT (AND ALTERNATE FUSE) PROTECTION MOTOR — FUSETRON OR FUSTAT — FUSE 110V. A.C. 60 SYN. — 3.2 AMP. — 6 AMP. 110 V.A.C. 60 GOV. — 1.6 AMP. — 3 AMP. 110 V.A.C. 25 GOV. — 1.4 AMP. — 3 AMP. 110 V.A.C. 25 SYN. — 3.2 AMP. — 6 AMP. 110 & 220V. D.C. GOV. — .8 AMP. — 3 AMP.
2.	WIRE COLOR CODE AND SYMBOLS: MAY BE SOLID COLOR OR TRACER IN WHITE WIRE Y YELLOW — W WHITE — R RED G GREEN — O ORANGE — BK BLACK BR BROWN — S SLATE — BL BLUE P PURPLE (RED & BLUE TRACER) ——x DENOTES: TAPE WIRE ——X DENOTES: SPLICE & TAPE
3.	ASSOCIATED CABLES: —— 91770 BASE-LINE – – – – 91769 BASE-POWER – – – – 91763 D.C. MOTOR UNIT – – – – 91762 A.C. MOTOR UNIT —— 92238 KEYBOARD UNIT —— 91277 TYPING UNIT —— 91768 STRAP —— 74572 KEYBOARD UNIT —— 92237 KEYBOARD UNIT —·—·— 114749 KEYBOARD UNIT
4.	MOTOR CONTROL RELAY WIRED AS FOLLOWS ON BB78: 1) REMOVE "BK" WIRE FROM SWITCH TERMINAL "B" AND CONNECT TO TERMINAL "A". 2) CUT WIRE LOOP AT CONTROL RELAY COIL AND CONNECT TO TERMINALS "H" AND "J". 3) CUT WIRE LOOP AT CONTROL RELAY CONTACTS AND CONNECT "F" TO "C" AND "G" TO "D". MOTOR CONTROL RELAY NOT FURNISHED ON BB26.
5.	SEND-RECEIVE-BREAK MECHANISM NOT WIRED ON BB78.
6.	TO DISABLE SEND-RECEIVE-BREAK MECHANISM: 1) SPLICE AND TAPE WIRES MARKED "X" 2) TAPE WIRE MARKED "Y" 3) SPLICE AND TAPE WIRES MARKED "Z"
7.	IF MOTOR FAILS TO REACH DESIRED SPEED WITH GOVERNOR ADJUSTED, INSERT 50, 100 OR 200 OHMS IN FIELD LOOP. IF VOLTAGE IS EXCESSIVE, INSERT 50 OHMS IN ARMATURE CIRCUIT BY SUBSTITUTING ARMATURE LOOP FOR FIELD LOOP. (FOR 50 OHMS STRAP 1 & 3 AND CONNECT LEADS TO 1 & 2 OR 2 & 3. 200 OHM RESISTOR NOT PRESENT ON 220 V. D.C. MOTORS.
8.	CONNECT ONE OF THE 1000 OHM RESISTOR LEADS TO TERMINAL 45 WHEN IT IS NECESSARY TO REDUCE THE NEGATIVE INTERNAL BIAS OF HOLDING MAGNET TYPE PRINTERS WITH SELECTOR COILS CONNECTED IN PARALLEL.
9.	LINE JACK IS OPEN WHEN PRINTER IS IN POSITION.
10.	WIRING OF KEYBOARDS SHOWN FOR .020 AMP OPERATION. FOR .060 AMP OPERATION, MOVE WIRE FROM END OF 3700-800Ω RESISTOR TO CENTER TERMINAL SO THAT 800Ω IS IN THE CIRCUIT.

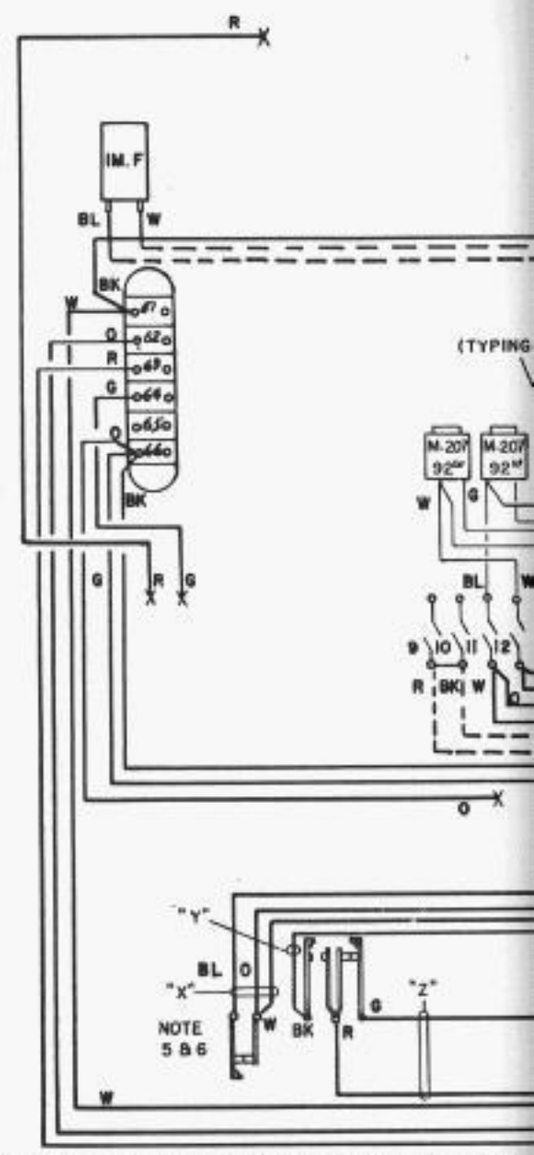

KEYBOARD BK II AND BK32, 203, 204 WITH 92235 SET PARTS; PLUNGER TYPE LINE TEST KEY (SEE NOTE 10)

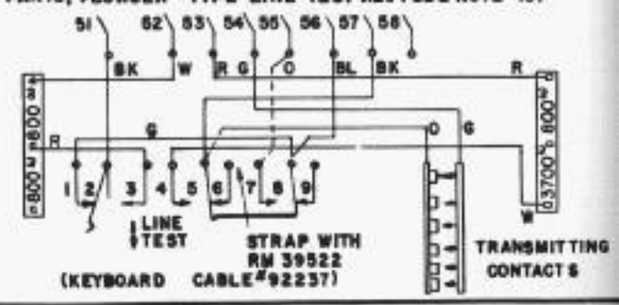

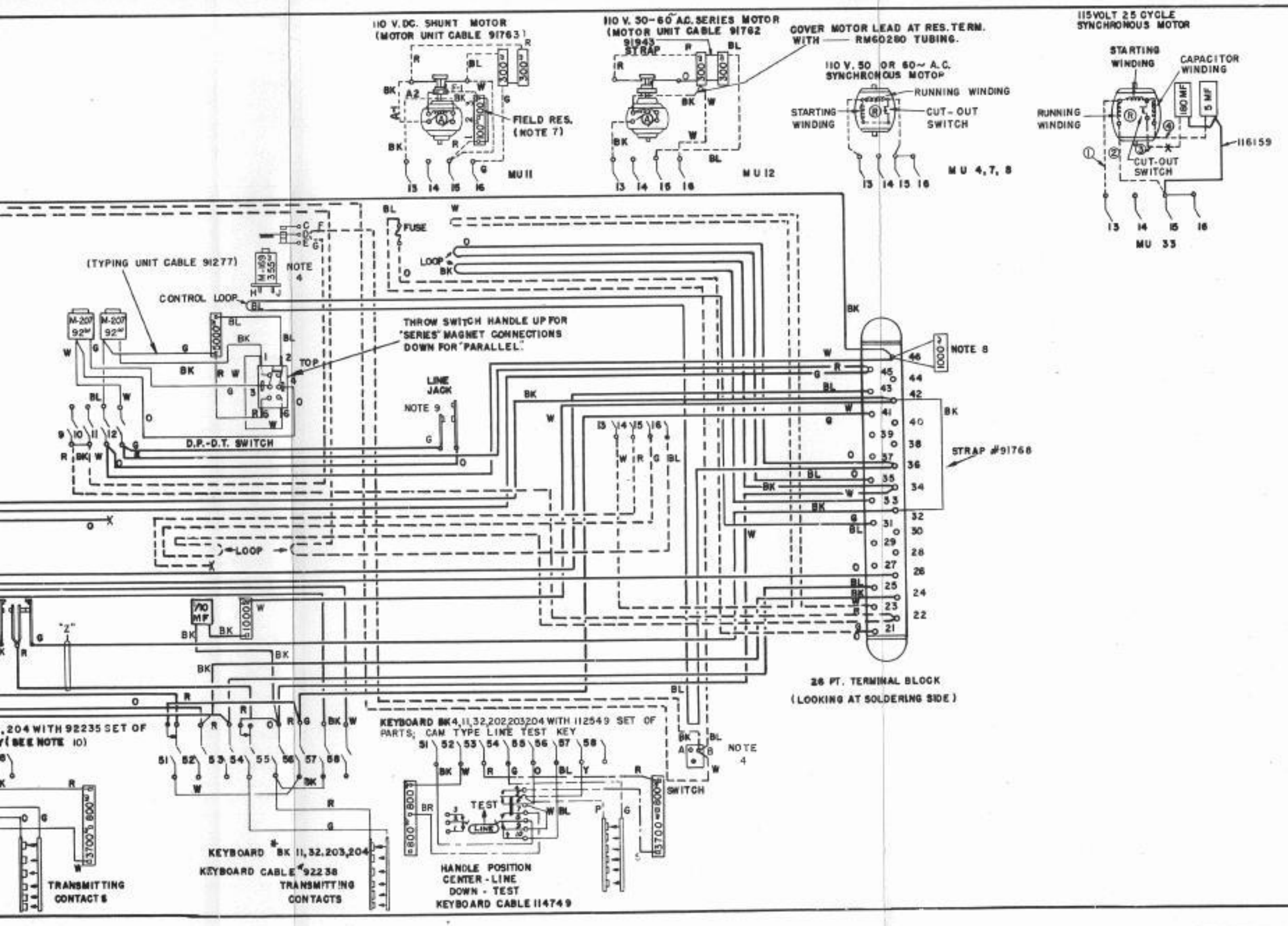

REVISIONS		
(W)	3-16-48	44080
(X)	9-21-48	45508
(Y)	10-26-48	45769
(Z)	11-17-48	45934
(AA)	1-25-49	46555
(AB)	4-27-50	49480
(AC)	5-15-50	49548
(AD)	10-31-50	50312
(AE)	3-26-51	51119

WD-1620-AE
12-15-36

WIRING DIAGRAM
15 TYPE

PRINTER UNITS 155
BP 64, 110, 120, 128, 127, 136, 129, 146, 155, 166, 173
BK 4, 11, 32, 202, 203, 204
BB 26, 78
MU 4, 11, 7, 8, 12, 33

DRAWN: G.A.R. APPROVED:
ENG'R'D:
CHECKED:
FILE: 6-30.8.14A

TELETYPE
CORPORATION