35 TRANSMITTER (LX)

PARTS

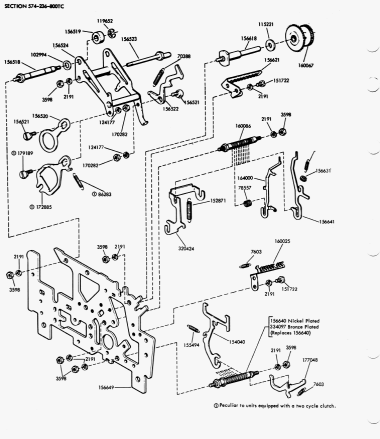

Ⓟ Peculiar to units equipped with a two cycle clutch.

FIGURE 1. FRONT PLATE MECHANISM

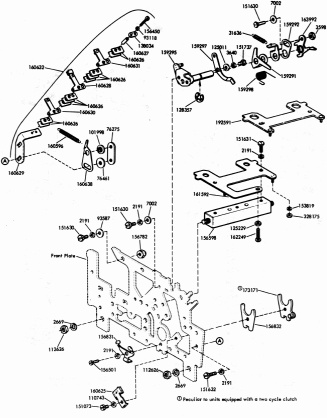

FIGURE 2. FRONT PLATE MECHANISM (Continued)

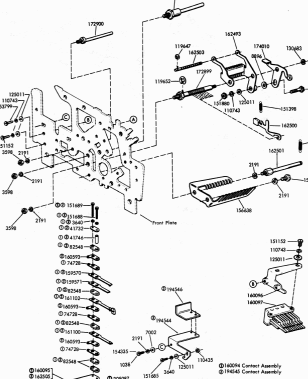

FIGURE 3. FRONT PLATE MECHANISM (Continued)

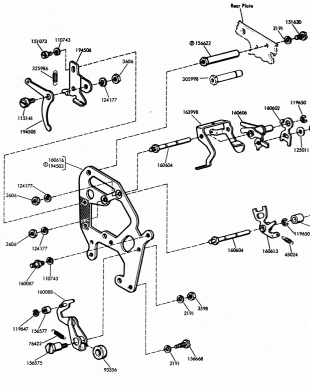

① Holes In Crosshatched Area are Peculiar to 194503
② Replaced by 302990

FIGURE 4. CENTER PLATE MECHANISM

SECTION 574-236-8001C

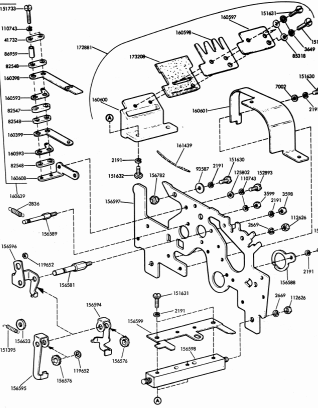

FIGURE 5. REAR PLATE MECHANISM

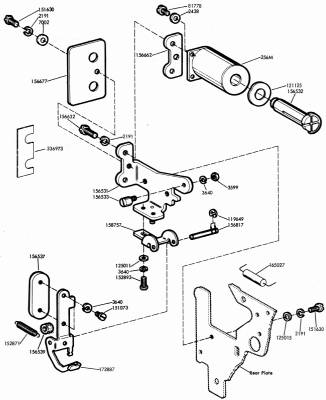

FIGURE 6. CLUTCH TRIP MAGNET MECHANISM

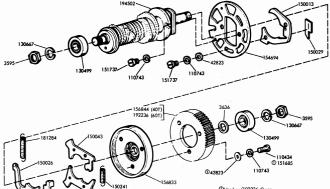

FIGURE 7. MAIN SHAFT MECHANISM - 1 CYCLE

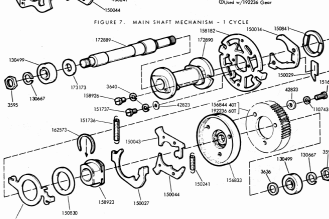

FIGURE 8. MAIN SHAFT MECHANISM - 2 CYCLE

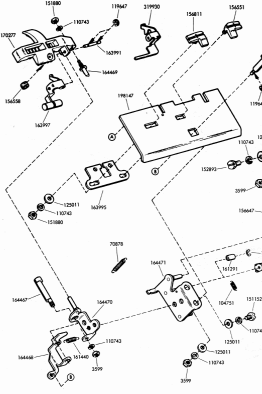

FIGURE 9. TAPE GUIDE PLATE MECHANISM

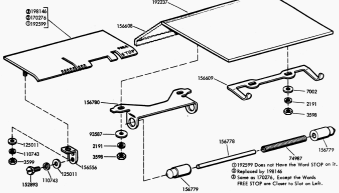

FIGURE 10. COVER AND TOP PLATES

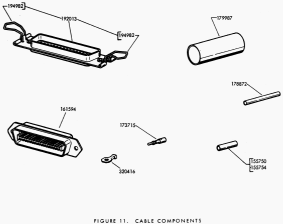

FIGURE 11. CABLE COMPONENTS

NUMERICAL INDEX

Part Number	Description and Page Number
256M	Coil, Magnet 7
3108	Screw 6-40 x 9/32 Fil 154335 4
2191	Lockwasher 2,3,4,5,6,7, 2,3
2438	Washer, Flat 7
3669	Lockwasher 5,6
2836	Spring 6
5595	Nut, 1/4-32 Hex 8
5598	Bolt, 6-40 Hex 2,3,4,5, 6,10
5599	Nut, 4-40 Hex 6,7,9,10
5636	Nut, 6-40 Hex 5
5636	Nut, Flat 8
5640	Lockwasher 5,4,7,8
5649	Washer, Flat 7
7002	Washer, Flat 3,4,6,7,10
7603	Spring 2
8896	Screw, Shc 2-56 x 3/16
51636	Spring 5
41752	Plate Clamp 4,6
41746	Bushing, Insulating 4
42623	Washer, Flat 8
45024	Spring 5
70566	Washer 7
70878	Spring 9
74278	Terminal, Contact 4
74987	Spring, Compression 10
76275	Washer, Flat 7
76423	Spring 5
76461	Washer, Flat 3
78917	Spring 5
80945	Spring 5
81778	Screw, 4-40 x 3/16 Fil 7
82547	Insulator, .094" Thk 6
82548	Insulator, .062" Thk 4, 6
85518	Washer, Leather 6
86285	Spring 2
86909	Bushing, Insulating 6
95118	Lockwasher 3
95356	Washer, Fels 5
95587	Washer, Flat 3,6,10
119998	Bushing, Shoulder 3
102994	Washer, Flat 2
104751	Spring 9
110458	Screw, 4-40 x 3/16 Hex 8
110485	Nut, 4-40 Hex 4
110673	Lockwasher 5,6,6,8,9, 10
112626	Nut, 10-32 Hex 3,6

Part Number	Description and Page Number
115141	Screw, 6-40 Shoulder 5
115221	Washer, Fel 2
119647	Ring, Retaining 4,5,9
119648	Ring, Retaining 9
119649	Ring, Retaining 7,9
119650	Ring, Retaining 5
119651	Ring, Retaining 9
119652	Ring, Retaining 2,4,6,9
121125	Washer, Spring 7
124177	Screwdriver 2,5
125011	Washer, Flat 3,4,5,7,9, 10
125015	Washer, Flat 7
125029	Nut, 2-32 Hex 5
125082	Washer, Flat 6
128537	Ring, Retaining 2
130499	Bearing, Ball 8
133667	Lockwasher 8
133685	Lockwasher 4
138034	Plate, Clamp 3
150115	Disc, Diffusing 9
150014	Disc, Adjusting 8
150026	Screw, Shc Binder 8
150027	Lever, Shoe Release 8
150029	Wick, Felt 8
150045	Disc, 2 Stop Clutch 8
150045	Disc, Secondary Clutch 8
150044	Shoe, Primary Clutch 8
150241	Spring 8
150830	Bushing, Shoulder 8
150841	Bearing 8
151075	Screw, 4-40 x 5/32 Fil 8
151152	Screw, 4-40 x 3/16 Hex 4,5,9
151395	Screw 6
151398	Spring 4
151630	Screw, 6-40 x 1/4 Hex 3,5,6,7
151631	Screw, 6-40 x 5/16 Hex 3,6
151632	Screw, 6-40 x 3/8 Hex 3, 6
151685	Screw, 4-40 x 5/16 Fil 8
151688	Screw, 4-40 x 5/8 Fil 4
151689	Screw, 4-40 x 3/4 Fil 4
151692	Screw, 6-40 x 3/16 Fil 6

Part Number	Description and Page Number
151722	Screw, 6-40 x 5/16 Hex 2,4,6
151723	Screw, 4-40 x 9/16 Fil 6
151756	Spring 8
151737	Screw, 4-40 x 11/64 Hex 3,8
151880	Nut, 4-40 Hex 4,9
152871	Spring 2,7
152893	Screw, 4-40 x 1/4 Hex 6,7,9,10
153799	Screw, 4-40 x 21/64 Hex 4
153819	Lockwasher 3
154040	Lever, Transfer 2
154335	Screw, 6-40 x 9/32 Fil 4
154694	Disc, Clutch Cam 8
155494	Spring 2
155750	Sleeve, 3/32 ID x 1/2" Lg Insulating 10
155754	Sleeve, 1/16 ID x 1/2" Lg Insulating 10
156450	Screw, 2-56 x 1/2 Fil 3
156501	Screw, 6-40 x 7/32 Fil 2
156518	Post 2
156519	Post, Felt 2
156520	Arm 2
156521	Screw, 6-40 Eccentric Shoulder 2
156522	Pawl 2
156525	Stud, Eccentric 2
156524	Ball 2
156531	Bracket w/Post 7
156532	Cam 7
156533	Screw, 4-40 Eccentric 7
156537	Armature 7
156539	Washer, Flat 7
156551	Guide, Right 9
156555	Plunger, Tape Lif 9
156556	Bracket 9,10
156558	Washer, Felt 9
156575	Screw, 6-40 Eccentric Shoulder 5
156576	Washer, Felt 6
156577	Roller, Detent Lever 5
156581	Stud 6
156588	Ring, Retaining 6
156589	Post, Spring 6
156594	Lever, Trip 6
156595	Latchlever 6
156596	Ball 6
156597	Plate, Rear 6

NUMERICAL INDEX (Continued)

NUMERICAL INDEX (Continued)